Flammability Standards for Building Insulation Materials Work Group

FINAL REPORT / RECOMMENDATIONS

[Need to update photos]

CAL FIRE – Office of the State Fire Marshal
Draft September 4, 2014

Message from the State Fire Marshal

[Text to be added by Chief Hoover]

DRAFT

Acknowledgements

This report was developed through the culmination of many hours of in-depth research and analysis through outstanding collaborative efforts of the many disciplines involved with the Office of the State Fire Marshal **Flammability Standards for Building Insulation Materials Working Group**.

Members of the Flammability Standards for Building Insulation Materials Working Group:

[Add or Remove people?]

Kevin Reinertson – Chair - CAL FIRE – Office of the State Fire Marshal
Eric Banks - BASF Corp., representing the Spray Foam Coalition of the Center for the Polyurethanes Industry (CPI)
Jesse Beitel - Hughes Associates, representing the American Chemistry Council (ACC)
Tonya Blood - Bureau of Electronic and Appliance Repair, Home Furnishings and Thermal Insulation (BEARHFTI)
George Combs- Bayer Material Science LLC
Gordon Damant - Damant & Associates
Barb Fabian- Owens Corning
Michael D. Fischer - Kellen Company, representing the Polyisocyanurate Insulation Manufacturers Association (PIMA)
Gene Gantt - California State Firefighters Association
Andrew Henning - CAL FIRE – Office of the State Fire Marshal
Marcelo M. Hirschler - GBH International, representing the North American Flame Retardant Alliance (NAFRA)
Howard Hopper – Underwriters Laboratories, LLC
Avery Lindeman - Green Science Policy Institute
Donald Lucas - Environmental Energy Technologies Division, Lawrence Berkeley National Laboratory
Jim McGowan - California Building Standards Commission
Robert Raymer - California Building Industry Association (CBIA)
Walter Reiter - Expanded Polystrene (EPS) Industry Alliance
Lorraine A. Ross - Intech Consulting Inc., representing the Extruded Polystyrene Insulation Manufacturers Association (XPSA)
Veena Singla - Natural Resources Defense Council
Adria Smith - Fountain Valley Fire Department, representing Cal Chiefs / SoCal Fire Prevention Officers Association
Joel Tenney - ICL-IP America Inc., representing Israeli Chemicals
Paul Wermer, Paul Wermer Sustainability Consulting, representing the U.S. Green Building Council of California
Kevin White - California Professional Firefighters

DRAFT

Mike Wilson - California Department of Industrial Relations, representing California Labor & Workforce Development Agency (LWDA)

Working Group Alternates:

James Carver – City of El Segundo, representing CalChiefs, Southern California Fire Prevention Officers

Carrie Cathalifaud - Bureau of Electronic and Appliance Repair, Home Furnishings and Thermal Insulation (BEARHFTI)

Tim Earl - GBH International, representing the North American Flame Retardant Alliance (NAFRA)

John Ferraro- Extruded Polystrene Foam Association (XPSA)

Steve Fischer - Bureau of Electronic and Appliance Repair, Home Furnishings and Thermal Insulation (BEARHFTI)

Justin Malan - ECO Consult, representing the U.S. Green Building Council of California

Jerry Phelan- Bayer Material Science

Greg Pruden, Department of Consumer Affairs

Steve Risotto - American Chemistry Council

Tim Shestek - American Chemistry Council

Jeff Sickenger - KP Public Affairs, representing the American Chemistry Council

~~Don Wheat ?~~

John Woestman- Extruded Polystyrene Foam Association

The Office of the State Fire Marshal thanks each member and their organizations for their assistance with this important work.

Preface

[Need to write Preface section. Strikeout section is from Sprinkler report]

~~This document is Part 1 of a 3 part series regarding issues related to the adoption of regulations in preparation for a statewide residential fire sprinkler requirement for new construction scheduled for implementation January 1, 2011. This part is known as the ***Residential Fire Sprinkler/Water Purveyor Task Force***.~~

~~On October 9, 2008, the Office of the State Fire Marshal convened representatives from various disciplines related to water supply and how it relates to residential fire sprinklers. The purpose of the Residential Fire Sprinkler/Water Purveyor Task Force was to provide information and suggested recommendations to the State Fire Marshal on all water supply issues related to residential fire sprinkler systems and to recommend strategies for solutions.~~

~~Our key stakeholders include members of the California Fire Service, Building Industry, Building Officials, Water Purveyors, American Water Works Association, Public Health Officials, State agencies, National Fire Protection Association, National Fire Sprinkler Association and the California League of Cities.~~

DRAFT

Table of Contents

Message from the State Fire Marshal.....i

Acknowledgements.....ii

Preface.....iii

Table of Contents.....v

Executive Summary.....1

Foreword.....1

Background.....**Error! Bookmark not defined.**

Working Group Scope.....3

Code Requirements for Insulation.....5

History of Fire Testing of Foam Plastics in Codes.....7

Concerns with Flame Retarded Foam Plastic Insulation and Fire Testing.....8

Questions Regarding Fire Testing of Foam Plastic insulation in Codes.. **Error! Bookmark not defined.**

New Working Group Direction by the State Fire Marshal**Error! Bookmark not defined.**

Results of New Direction.....38

Set of Proposed Assemblies that Might Provide Adequate Fire Safety.....39

Wall Construction Proposal - assembly to be composed of:.....39
Floor/Ceiling Construction Proposal- assembly to be composed of:.....40
Crawlspace Construction Proposal- assembly to be composed of:.....41
Attic Construction Proposal- assembly to be composed of:.....41
Underfloor Construction Proposal- - assembly to be composed of:.....42

Conclusion.....47

Appendices.....

DRAFT

Executive Summary

[Need to write Executive Summary section. Strikeout section is from Sprinkler report]

~~On October 9, 2008, the Office of the State Fire Marshal convened representatives from various disciplines related to water supply and how it relates to residential fire sprinklers. The purpose of the **Residential Fire Sprinkler/Water Purveyor Task Force** was to provide information and suggested recommendations to the State Fire Marshal on all water supply issues related to residential fire sprinkler systems and to recommend strategies for solutions. This is in preparation for a statewide residential fire sprinkler requirement for new construction scheduled for implementation January 1, 2011. For the purpose of this project the group identified the following definition of residential construction to apply to detached one-and two-family dwellings and townhouses not more than three stories above-grade in height with a separate means of egress. (Note: This definition comes from the International Residential Code.)~~

[95% Match Editing]Foreword

In January 2014, CAL FIRE - Office of the State Fire Marshal (**OSFM**) convened a working group for the review of flammability standards for building insulation materials. This was a result of the issuance of Assembly Bill 127 (**AB 127**, 2013), introduced by Assembly Member Nancy Skinner that addressed fire safety and flame retardants in building insulation. The intent of the working group was to review published data and technical information, examine peer reviewed scientific studies and information, and propose recommendations to State Fire Marshal Tonya L. Hoover. These recommendations could include alternatives to current code requirements that would maintain fire safety of buildings, building occupants, and first responders while allowing for the use of insulation materials without added flame retardant chemicals.

The working group was directed to focus on the following areas, which are consistent with new requirements in Health and Safety Code §13108.1, per AB 127 (Appendix A):

1. Review the California flammability standards for building insulation materials, including whether the flammability standards for some insulation materials can only be met with the addition of chemical flame retardants.
2. Determine if updated insulation flammability standards should be adopted that maintain overall building fire safety and ensure that there

is adequate protection from fires that travel between walls and into confined areas, including crawl spaces and attics, for occupants of the building and any firefighters who may be in the building during a fire.

Background

At the April 17, 2014 meeting of the working group, State Fire Marshal Tonya Hoover clarified that the primary interest of the Office of the State Fire Marshal is in fire and public safety. Her comments are transcribed in Appendix E.

Chief Hoover stated that:

- A letter from AB 127 author Assembly Member Nancy Skinner provided clarification of her intent, including a narrowed scope and support for alternatives to ASTM E84 in the California Building Standards Codes (Appendix H).
- Everybody can recognize that ASTM E84 is not the best test for all construction circumstances; construction techniques and products and fixed protection have evolved over the life of the building codes.
- There could very well be construction alternatives that provide necessary level of fire safety without requiring testing in accordance with ASTM E84.

Comment [KR1]: Readdress with Chief Hoover

Chief Hoover requested that the workgroup develop recommended alternative construction methods to testing by ASTM E84 that would achieve the needed fire safety. These could include: construction methods that build assemblies with barriers; fixed protection systems; the limited introduction of items in areas such as walls, floors and ceilings, and ceiling openings to limit the introduction of air, fire, and smoke into those spaces; or development of a more appropriate test. Chief Hoover asked for these alternatives, with the understanding that the alternatives do not have to be used or mandated.

Comment [KR2]: Look at Chief Hoover comments

Chief Hoover acknowledged that assembly testing may be needed to establish that the proposed alternatives maintain comparable safety to current code requirements.

[Section Expanded by ~50%]Sources of Data

The working group was asked to review information published in reports or scientific publications and presentations, as well as current research and test results, ~~potentially unpublished~~, and relevant codes, standards and regulations to form a basis for the working group's observations, conclusions

Comment [AL3]: Which ones are these?

and recommendations. All the documents to be considered had to include data and observations that are applicable to modern technologies, concerns and building construction practices. Anecdotal data would be considered by the working group, but not given as much weight as the technical data described above. ~~Moreover,~~ Chief Hoover ~~explained to the working group at the start of the first meeting that she was interested in~~asked for meaningful data~~ and~~: the ability to make a measurement does not ~~necessarily measurable data.~~mean that said measurement is useful or practical.

Comment [AL4]: Do we even need this sentence?

Appendices B1 and B2 contains some of the ~~multitude of~~ referenced documents that the working group ~~selected to use as a basis for~~considered during their work. In many cases data and findings cited in this report include footnotes and references to one or more source documents.

Comment [AL5]: These still need to be incorporated…

Note also that California regulations covering insulation are included in the California Health and Safety Code.

Working Group Scope

[NEW] Insulation Materials- The group was tasked to address thermal insulation materials. Such insulation materials include~~, but are not limited to, the following:~~ :

- foam plastics (including~~, typically,~~ expanded polystyrene or **EPS**, extruded polystyrene or **XPS**, rigid polyurethane or **PUR**~~),~~, spray polyurethane or **SPF**, polyisocyanurate or **polyiso** or **PIR**, polyimide, phenolic, melamine, polyolefin, and others~~),)~~
- cellulose loose-fill~~,~~
- fiberglass~~,~~
- mineral wool~~,~~
- reflective~~,~~
- straw bale~~,~~
- cementitious foam~~ and~~
- recycled denim~~.~~

Comment [PHW6]: Revise to add "polyiso" – so it would read "polyisocyanurate or polyiso or PIR". We have refered to it throughout as polyiso.

Some of these insulation materials do not typically need flame retardants to meet code requirements (for example fiberglass, mineral wool or polyimide foam~~)~~), but many others do.

Comment [AL7]: Move to an appendix?

[Match] Building envelope- The working group's scope is insulating materials used for thermal or acoustic insulation within the building envelope. This includes insulation used in the following locations and applications:

Comment [AL8]: What does this mean?

1. Insulation used on the building exterior, including but not limited to, insulation in Structural Insulated (or Insulating) Panels (**SIPs**), Exterior Insulation and Finish Systems (**EIFS**), External Wall Insulation Systems (or **EWIS**) and similar systems (typically continuous insulation).
2. Insulation used inside the building's interior and exterior wall cavities.
3. Insulation used between floors (for example, insulation used in the ceiling cavity of a floor/ceiling assembly).
4. Insulation used between ceiling membranes and attic spaces.
5. Insulation that is part of a roof or deck structure (for example, insulation between joists or rafters or insulation applied as part of the outer layers of the roof covering system).
6. Insulation used in crawl spaces and inside doors.
7. Insulation used as part of a cold room or freezer room.
8. Insulation used as part of below grade insulation and in related thermal breaks.

Comment [AL9]: Did we address these? Are they reflected in the report?

Comment [AL10]: Did we address this?

[Underline is new] **Exclusions**~~- After the first few meetings the~~ – The working group intentionally excluded from current consideration insulation used for~~-~~:

- mechanical equipment~~,~~
- ductwork~~,~~
- piping~~,~~
- appliances and other installed equipment~~ and~~
- all insulation used in plenums.

The working group ~~also decided~~concentrated on wood-framed non-rated construction: proposed code changes apply only to ~~concentrate on~~ type V construction. Residential occupancies are most typically associated with type VB construction, and the group has focused discussion on the residential ~~environments, meaning one and two family dwellings, covered by~~ construction market.

Any code changes pursuant to this Working Group should be drafted for both the California Residential Code~~, and to exclude buildings~~ (CRC) that ~~are covered exclusively by the~~ applies only to one-and-two family dwellings, and the California Building Code~~, at least in the first approach.~~ (CBC) that applies to all occupancy types including one-and-two family dwellings. CBC Chapter 26 makes a clear distinction between requirements for plastic foam insulation in type V construction versus requirements for all other construction types (see CBC 2603.5), but does not address occupancy types. Code changes will be most consistent with existing code structure if not restricted by occupancy type.

Comment [AL11]: This perhaps belongs elsewhere, e.g. with the "WG recommendations" section

DRAFT

~~**[NEW] Metrics-** The working group was faced with a key question, which is: what metric is to be used to ensure that the fire safety of buildings is maintained, as the bill requires. Thus, the question remains as to what are the criteria to be used to determine/measure that the level of fire safety is maintained, so as to match the intent of the bill? Also, the working group considered whether it is essential to determine a way to judge the economic impact of any recommendations.~~

The Working group formed by the SFM to address AB 127 was instructed to explore alternatives to the historically-mandated ASTM E84, and does not propose restricting the use of insulation containing flame retardants. Rather, the intent is to provide a choice of whether to use flame retarded or non-flame retarded insulation materials. Consumers may choose to continue to use flame retarded foam in accordance with current codes that regulate their use (CBC and CRC 2013). As such, economic impacts are not relevant and have not been included in the discussion.

Comment [PHW12]: We need to keep this, or language clearly indicating that this is the first case, and can be expanded in the future based on competent data – e.g . introducing the Swedish code concept of a performance based, rather than prescriptive, compliance route.

[NEW] Metrics – Proposals resulting from Working Group discussion should maintain fire safety. A major difficulty in establishing comparable fire safety of potential code proposals was the selection of appropriate metrics for fire safety. The section "Results of Working Group Discussions" proposes a process that would evaluate the comparative fire safety of current code-compliant construction with proposed assemblies, so as to fulfill the intent of the bill.

Comment [AL13]: These may not reflect the consensus of the WG

Code Requirements for Insulation

[Match]Fire Performance in California Building Codes~~-~~ – The International Building Code (**IBC**) and the International Residential Code (**IRC**), which form the basis for the California Building Code **(CBC)** and California Residential Code~~,~~ **(CRC)**, are developed by a ~~government~~private-sector consensus-based process. Among other objectives, the purpose of these codes is to establish requirements to safeguard life and property from fire and other hazards attributed to the built environment and to provide safety to firefighters and emergency responders during emergency operations.

[95% New / 5% existing] Fire test standards~~-~~ – The IBC and IRC ~~codes~~ require specific material types and construction practices with the goal of ensuring adequate levels of *fire safety*~~ based on the fire hazard and fire risk associated with the~~ for specific ~~occupancy~~occupancies and building ~~type~~types. In many cases this is done by requiring building materials and assemblies to comply with specific fire test standards that are adopted by reference in the code. These fire test standards evaluate the fire test

Comment [PHW14]: Suggest "performance testing" rather than "fire safety"

performance of the materials and assemblies ~~being tested, and~~ in terms of their responses to ~~certain~~the fire ~~exposures~~exposure specified in the test. In some cases the fire test standards include metrics for pass/fail ~~requirements~~results, but many of them ~~simply~~ describe ~~a~~ only the test procedure~~ to be followed. The~~. For the latter case, building codes both reference ~~these~~the fire test ~~standards~~standard to which a material should be tested and include ~~requirements for certain~~ specific fire ~~performance requirements in each fire test, if the fire test standard does not include the criteria (as is often the case).~~test response characteristics the material should exhibit. Examples of such fire test standards that are applicable to ~~most~~ insulation materials, depending on the application, are ~~NFPA 286, ASTM E84 (or UL 723), ASTM E108 (or UL 790), ASTM E119 (or UL 263), NFPA 268, NFPA 259, and NFPA 285 (titles are shown in list of references,~~included in Appendix C~~). There are also some~~. Some fire test standards ~~that~~ are applicable only to ~~some~~certain insulation materials. For example, cellulose loose-fill insulation must comply with US Consumer Product Safety Commission regulation, which includes passing two fire tests included in 16 CFR 1209 and being labeled in accordance with 16 CFR 1404.

~~None of these fire test standards include requirements that specify that materials (such as flame retardants) must be added to the products being tested to achieve a specific fire test response characteristic or a fire resistance rating. The addition of flame retardants is a fire safety tool that is used, strictly at the discretion of the manufacturer of a product, to achieve a specific improved fire performance.~~

Fire test standards cannot require a specific a method of compliance (e.g. through the use of particular materials or additives). In practice, manufacturers will select the most economical means of achieving compliance with requirements, including through the addition of flame retardant chemicals. It has been documented that certain materials, including plastic foam insulations for a variety of applications, can only comply with code mandated fire test requirements when they contain added flame retardant chemicals. These chemicals include **HBCD, TCPP, PolyFR**, or others. Plastic foam insulation materials without flame retardants are not available in the United States due to building code fire test requirements.

The addition of flame retardants to some insulation materials to pass fire tests such as ASTM E84 does not typically result in insulation that can be safely used without an appropriate thermal or ignition barrier. For this reason, building codes currently require that plastic foam insulation be separated form habitable spaces using a compliant thermal barrier, such as 0.5-inch gypsum wallboard.

DRAFT

Appendix D ~~includes a list of the fire test standards, and~~outlines the ~~corresponding~~ requirements~~,~~ that apply to constructions with foam plastic insulation (and to cellulose loose-fill insulation) in accordance with the California Building Code and California Residential Code.

Comment [AL15]: Why? Is there a reason for this?

Flame retardants used in insulation – ~~As explained above, some of the many~~Many materials used as building insulation rely upon the addition of flame ~~retardants~~retardant chemicals to meet ~~the~~code-mandated fire test requirements~~ included in the code or some additional~~. Other requirements~~. For example, cellulose~~ may also lead to the use of flame retardants in these materials. Several examples are included below for informational purposes only.

- Cellulose loose-fill insulation: relies upon flame retardants~~,~~ such as boric acid, borax, other borates, or ammonium sulfate~~,~~ to meet ~~not just the~~building code requirements ~~but also the~~as well as legal requirements imposed by **CPSC [Never Defined]**(as shown above). ~~In the case of some other insulation materials, such as expanded~~
- Expanded polystyrene (EPS) or extruded polystyrene (XPS~~), they~~) for use in certain applications must comply with ~~standard specifications, such as~~ ASTM C578, which requires that the materials meet an oxygen index (or **LOI [Never Defined]**) ~~higher than can~~that cannot be achieved ~~by the material~~ without the use of flame retardants. ~~Finally, the code requires that all~~These applications are detailed in R403.3 (frost-protected shallow foundations); R613.1 (SIPs); R703.11.2.1 (vinyl siding with foam plastic sheathing); R906.2 (above-deck roof insulation); and CBC 1508.2 (above-deck thermal roof insulation ~~materials be listed and labeled by a nationally recognized testing laboratory and the listing requirements also include the requirement for fire testing of the insulation. In fact, thus, the manufacturers of any insulation material produce products for use in construction that must meet a variety of requirements (beyond just fire performance) and they comply in the manner that is most appropriate and commercially viable.~~).

Flame ~~retardants (or flame~~ retardant chemicals~~)~~ will not be addressed individually ~~for the purpose of~~in this ~~working group. Moreover, the issue of the inherent toxicity of the~~report. Toxicity and other issues relating to flame retardants used ~~for~~in foam plastic insulation materials ~~was~~were considered to be outside the scope of this working group~~, because it is not a fire safety issue~~.

[Mainly editing/some new] History of Fire Testing of Foam Plastics in Codes

DRAFT

~~A~~ Jesse Beitel provided a presentation ~~was provided by Jesse Beitel to the working group~~ detailing~~-~~:

- the history ~~relating to the~~of regulations for foam plastic insulation in Building and Residential Codes in the United States~~ and~~
- a summary of ~~the~~ current ~~Code~~code requirements in the CBC.

The presentation described early testing and issues associated with ~~inadequate descriptions of~~misleading claims about the flammability of foam plastics. This resulted in a Federal Trade Commission Consent "Cease and Desist Order~~",~~" in the 1970s~~ and in research by the~~. The foam plastics industry, in conjunction with ~~various~~other organizations (including **UL** and the National Institute of Standards and Technology (**NIST**~~))~~)), conducted additional research following this order to develop new fire tests ~~that are applicable to~~ for foam plastics. ~~This includes~~ These included **material tests** and **assembly tests**~~, to be used in construction.~~ The result was the introduction of ~~Code~~building code requirements ~~into the Codes for the regulation of~~for foam plastics that are similar to those in use today~~. The requirements, as shown in~~ (Appendix D~~, include both material tests and assembly tests.~~).

Comment [AL16]: These terms should be defined

The presentation ~~then~~also provided ~~a detailed~~an overview ~~describing~~of the ~~various~~fire test requirements and their applications in the current building codes (the 2013 CBC~~, which form the basis for the appropriate use of foam plastic insulation in construction.~~). The presentation is included as an attachment (~~attachment # 1,~~ Appendix ~~E~~G).

Concerns with Flame Retarded Foam Plastic Insulation and Fire Testing

[New section. Should this be merged with *Questions Regarding Fire Testing of Foam Plastic insulation in Codes* (Next Section)? Should format match next section, if this section remains separate?]

Comment [AL17]: Should this become an Appendix?

A publication by Dr. Vyto Babrauskas **et al.** (2012) ~~poses some questions~~explores key issues that are directly relevant to CA AB 127. The publication ~~has made~~is a review of scientific literature, and contains over 100 citations. A brief summary of some ~~of the~~ key points is given below. Short summaries of the most relevant papers cited in the Babrauskas review are included in Appendix B1.

- ASTM E84 is invalid for plastic foams.
- In the unusual case of a cavity constructed in violation of the building codes (without proper fire-stopping), the ASTM E84 test rating for plastic foam insulation materials does not reliably predict fire propagation in the cavity.

DRAFT

- Compliance with ASTM E84 test requirements does not provide for acceptable/safe fire behavior of exposed plastic foam insulation materials.
- Previous research does not support the replacement of ASTM E84 with a more accurate test for plastic foams. Such a test would be expected to preclude from use all economically-viable conventional foam materials.
- The replacement of ASTM E84 is not necessary, as code provisions for thermal barriers provide adequate fire safety for finished buildings.
- Current thermal barrier and firestopping requirements protect insulation from fire for at least 15 minutes of post-flashover conditions.
- US Building Codes do not regulate materials use during construction or demolition, and all requirements refer only to the condition as found after completion of construction.

Concerns with Flame Retarded Foam Plastic Insulation and Fire Testing

[New section. Should this be merged with *Questions Regarding Fire Testing of Foam Plastic insulation in Codes* (Next Section)? Should format match next section, if this section remains separate?]

Comment [AL18]: Should this become an Appendix?

A publication by Dr. Vyto Babrauskas **et al.** (2012) ~~poses some questions~~explores key issues that are directly relevant to CA AB 127. The publication ~~has made~~is a review of scientific literature, and contains over 100 citations. ~~A brief summary of some key points is given below.~~ Short summaries of the most relevant papers cited in the Babrauskas review are given below

- ~~ASTM E84 is invalid for plastic foams.~~
- ~~In the unusual case of a cavity constructed in violation of the building codes (without proper fire-stopping), the ASTM E84 test rating for plastic foam insulation materials does not reliably predict fire propagation in the cavity.~~
- ~~Compliance with ASTM E84 test requirements does not provide for acceptable/safe fire behavior of exposed plastic foam insulation materials.~~
- ~~Previous research does not support the replacement of ASTM E84 with a more accurate test for plastic foams. Such a test would be expected to preclude from use all economically-viable conventional foam materials.~~
- ~~The replacement of ASTM E84 is not necessary, as code provisions for thermal barriers provide adequate fire safety for finished buildings.~~
- ~~Current thermal barrier and firestopping requirements protect insulation from fire for at least 15 minutes of post-flashover conditions.~~
- ~~US Building Codes do not regulate materials use during construction or demolition, and all requirements refer only to the condition as found after completion of construction.~~

DRAFT

Babrauskas *et al.* (2012): Summary and Key References

Babrauskas, V. et al. (2012) Flame retardants in building insulation: a case for re-evaluating building codes, *Building Research and Information*, 40:6, 738 – 755

(Note: This review paper asks questions that directly relate to AB 127. The questions were answered by a thorough scientific review of the literature, with over 100 papers cited. A brief summary of this paper is given below, along with summaries from the most relevant papers cited~~. Note that this summary is not a proper literature review, and the results from these studies need to be examined in detail. The following five points are made in the paper, as presented to the working group.~~.)

- The Steiner Tunnel test is invalid for plastic foams. ~~It states that, in~~In the unusual case of a cavity constructed in violation of ~~the~~ codes without proper ~~fire-stopping~~firestopping, the Steiner Tunnel test rating for insulation materials does not influence fire propagation.
- If buildings are constructed in violation of ~~the codes,~~code with exposed insulation, meeting the Steiner Tunnel test requirements still does not provide for acceptable behavior of these materials.
- Furthermore, research does not support the view that the change should be to replace the Steiner Tunnel with a more accurate test. If this were done, all economically viable foams would end up being precluded from use.

  Such a step is not necessary, as the code provisions for thermal barriers alone provide adequate fire safety benefits, i.e. the thermal barrier provides a 15-min finish rating, effectively protecting insulation from fire. (743)

  US Building Codes do not regulate materials usage during construction or demolition, and all requirements refer only to the condition as found after completion of construction. (740)

The following ~~are summaries of some~~ references ~~from the above paper by~~and short summaries are cited in Babrauskas *et al*. (2012~~), as presented to the working group.~~):

Babrauskas, V. (2003): *Ignition Handbook*, Fire Science Publ. and Society of Fire Science Engineers, Issaquah, WA.

- The auto-ignition temperatures of polyurethane and polystyrene are greater than 400ºC.

DRAFT

National Fire Protection Association (NFPA) (2009): *Standard method of fire tests for the evaluation of thermal barriers (NFPA 275)*, NFPA, Quincy, MA.

- This test ensures that barriers which pass the test will protect underlying foams for at least 15 minutes after flashover, as simulated by the standard fire resistance test. After 15 minutes, the temperature at the interface of the thermal barrier and the foam cannot be greater than 121ºC (on average), and the maximum allowable temperature at any one thermocouple is 163ºC. The values are greatly below the ignition temperatures of insulation foams and thus provide a safety factor, not just a bare minimum.

Zicherman, J.B. and Eliahu, A. (1998): Finish ratings of gypsum wallboards. *Fire Technology*, 34, 356-362.

- The authors tested half-inch gypsum wallboard from a number of manufacturers and found that they provided 15- to 20-minute finish ratings; at the end of the test period, all samples tested had retained structural integrity. Foam would not have been ignited behind these materials.

D'Sousa, M.V. et al (1981): Performance of protective linings for polystyrene insulation in a corner wall test. *Fire Technology*, 17(2), 85-97.

- In a full-scale room-corner test, a 0.5-inch gypsum barrier protected expanded polystyrene (EPS) foam insulation for 30 minutes.

Mehaffey, J.R. et al (1994): A Model for predicting heat transfer through gypsum-board/wood-stud walls exposed to fire. *Fire and Materials*, 18(5), 297-305.

- Gypsum wall board samples were tested using the criteria in NFPA275. All samples achieved finish ratings of 16 – 24 minutes.

Babrauskas, V. et al (1997): Testing for surface spread of flame: new tests to come into use. *Building Standards*, 66(2), 13-18.

- The Steiner Tunnel test (ASTM E84) is unreliable for evaluating fire hazard of plastic foams.

Factory Mutual (1974): *Foamed Polystyrene for Construction (Data Sheet 1-58)*, Factory Mutual, Norwood, MA.

Factory Mutual (1978): *Foamed Polystyrene for Construction (Data Sheet 1-58), Revision,* Factory Mutual, Norwood, MA.

DRAFT

- "Flame spread ratings by ASTM E84 tunnel test should be disregarded for foamed plastics."
  Note: According to Vyto Babrauskas, PhD, "This was the conclusion by one of the nation's most respected fire research establishments. Nothing has changed in the procedures of ASTM E84 testing that would justify changing that conclusion." (personal communication, March 13, 2014)

ASTM (2012): *Standard Test Method for Surface Burning Characteristics of Building Materials (ASTM E84 – 12a)*, ASTM International, West Conshohocken, PA.

- "Testing of materials that melt, drip, or delaminate to such a degree that the continuity of the flame front is destroyed, results in low flame spread indices that do not relate directly to indices obtained by testing materials that remain in place." (Section 1.4)

Rose, A. (1971): *Flammability of lining and insulating materials (Canadian Building Digest DBD-141)*, National Research Council of Canada, Ottawa, ON.

- Some foams tested could not be evaluated using ASTM E84 because of excessive smoke production which made observation of the flame front impossible.

Rose, A. (1975): *Fire testing of rigid cellular plastics (IR-422)*, National Research Council of Canada, Ottawa, ON.

- Some foams tested intumesced to such a degree that air flow in the Steiner Tunnel is no longer reflective of the prescribed test conditions.
- In corner tests of exposed foams, insulation materials with code-allowed FSI values between 18 and 65 led to room flashover in as little as 0.5 minutes.

Choi, K.K. and Taylor, W. (1984): Combustibility of insulation in cavity walls. *Journal of Fire Sciences*, 2(3), 179-188:

- Fire propagated rapidly when a gap of 1 inch or larger was present between insulation and the interior face of the wall. Smaller gaps did not display rapid propagation of flames.
- "The flame spread rating of materials used in the tests was not a significant factor [of fire propagation in the wall cavity]." (185)

Williamson, R.B. and Baron, F.M. (1973): A corner fire test to simulate residential fires. *Journal of Fire and Flammability*, 4, 99-105.

DRAFT

- Low flame spread index rigid polyurethane foams can undergo extremely rapid fire development if used uncovered. The materials tested had FSI values < 25.

Castino, T.G. et al (1975): *Flammability Studies of Cellular Plastics and Other Building Materials Used for Interior Finishes*. Subject No. 723, Underwriters Laboratories, Northbrook, IL.

- There is no correlation between Flame Spread Index and fire safety: low FSI does not imply a long time to flashover, nor does it imply a small amount of specimen destroyed in a fire.

Lee, B.T. (1985): Standard room fire test development at the National Bureau of Standards, in *Fire Safety: Science and Engineering (ASTM STP 882)*, ASTM, Philadelphia, PA, pp. 29-44.

- In full-scale room fire tests, uncovered polyisocyanurate and polystyrene foams with FSI < 25 resulted in very rapid times to flashover.

Dillon, S.E. (1998): Analysis of the ISO 9705 Room/Corner Test: Simulations, Correlations and Heat Flux Measurements (NIST-GCR-98-756). National Institute of Standards and Technology, Gaithersburg, MD.

- Exposed, flame retardant-treated foams were studied in large-scale burn tests. Extruded polystyrene (XPS) produced flashover in only 1.5 minutes, and expanded polystyrene (EPS) produced flashover in only 1.4 to 1.8 minutes.

Babrauskas, V. (1996): Wall insulation products: full-scale tests versus evaluation from bench-scale toxic potency data, in *Interflam 1996*, Interscience Communications, London, pp. 257-274.

- Foam plastic insulation materials meeting the current flammability standards for foam insulation (Steiner Tunnel test) do not perform acceptably in ISO 9705, considered to be a reliable test for assessing the fire hazard of exposed wall/ceiling surfaces.

Ahrens, M. (2011): *Home Structure Fires*, National Fire Protection Association, Quincy, MA.

- Insulation within a structural area was the primary item contributing to flame spread in only 2% of US home structure fires. Foam insulation very rarely presents a fire safety issue when it is properly protected behind a thermal barrier. This amounted to zero deaths and only 40 injuries (1% of fire injuries for the entire US).

DRAFT

Posner, S. et al (2010): *Exploration of Management Options for HBCD*, Swerea IVF, Mölndal, Sweden.

- "Using thermal barriers it is possible to fulfill fire safety requirements in most of the uses in constructions and buildings with EPS and XPS without a flame retardant." (40)
- "The national fire safety requirements are achieved by the building codes specifying the different uses of insulation products in buildings and construction, through the use of thermal barriers. In Scandinavian countries like Norway and Sweden buildings are constructed to prevent the spread of fire and additionally the buildings should not pose and health and/or environmental hazard to residents and the local environment." (46)

Molyneux, S. et al.(2013) The effect of gas phase flame retardants on fire effluent toxicity. *Polymer Degradation and Stability*:

- The presence of halogenated flame retardants may increase toxicity of fire effluents under certain combustion conditions.

Ebert, J. and Bahadir, M. (2003): Formation of PBDD/F from flame-retarded plastic materials under thermal stress. *Environment International*, 29(6), 711-716.

- Formation of dioxins has been observed during incorporation of brominated flame retardants and processing (e.g. extrusion cycles) of plastic foam insulation. Dioxin byproducts from manufacturing processes can be found in the commercial insulation product and in workplace air. Dioxins can be produced when halogenated flame retardants burn either in accidental fires or during intentional incineration.
- Polystyrene containing HBCD can produce brominated dioxins when burned. The amount produced will depend on the conditions of combustion.

Weber, R. and Kuch, B. (2003): Relevance of BFRs and thermal conditions on the formation pathways of brominated and brominated-chlorinated dibenzodioxins and dibenzofurans. *Environment International*, 29(6), 699-710.

- Brominated and brominated-chlorinated dibenzodioxins and dibenzofurans are produced during thermal processing of products containing brominated flame retardants, including during accidental fires of intentional incineration.

World Health Organization (WHO) (1998): *Polybrominated Dibenzo*-p-*dioxins and Dibenzofurans (EHC 205)*, WHO, Geneva.

DRAFT

- Human exposure to chlorinated dioxins has been associated with adverse health effects including some types of cancer, liver problems, impairment of immune, endocrine, or reproductive function, and disruption of nervous system development.
- "PBDDs/PBDFs are contaminants that are more or less similar to PCDDs/PCDFs in their persistence and toxicity. Therefore, humans and the environment should be protected from them… Brominated flame retardants and their precursors appear to be a main source of PBDDs/PBDFs."
- "Owing to the accumulating and toxic potential of some PBDDs/PBDFs, every effort should be made to prevent exposure of humans to, and pollution of the environment by, these compounds. Brominated flame retardants should not be used where suitable replacements are available, and future efforts should encourage the development of further substitutes."

Van den Berg, M. et al. (2006) The 2005 World Health Organization reevaluation of human and mammalian toxic equivalency factors for dioxins and dioxin-like compounds. *Toxicological Sciences*, 93(2), 223-241.

- Development of human exposure guidelines for brominated dioxins has been identified as a high priority by the World Health Organization.

Birnbaum, l. S. et al. (2003): Health effects of polybrominated dibenzo-*p*-dioxins (PBDDs) and dibenzofurans (PBDFs). *Environment International*, 29(6) 855-860.

- Brominated dioxins can have similar effects to those associated with chlorinated dioxins. Brominated dioxins could be contributing to the total dioxin toxicity experienced by humans.
- "Essentially all of the classic effects demonstrated for TCDD and the other chlorinated dioxins and furans…have been observed in the limited studies with PBDDs and PBDFs." (857)

Desmet, K. et al (2005): Determination of bromophenols as dioxin precursors in combustion gases of fire retarded extruded polystyrene by sorptive sampling-capillary gas chromatography-mass spectrometry. *Journal of Chromatography A*, 1071(1-2), 125-129.

- Polystyrene containing HBCD can produce brominated dioxins when burned. The amount produced will depend on the conditions of combustion.

DRAFT

Hsu, J.F. et al (2011): An occupational exposure assessment of polychlorinated dibenzo-*p*-dioxin and dibenzofurans in firefighters. *Chemosphere*, 83(10), 1353-1359.

- Serum samples from fire service professionals showed higher polychlorinated dibenzo-p-dioxin and dibenzofuran (PCDD/F) exposure than the general population, suggesting occupational exposure to these chemicals.

Bates, M.N. (2007): Registry-based case-control study of cancer in California firefighters. *American Journal of Industrial Medicine*, 344, 339-344.

- In a statistical analysis of cancers registered in California, firefighting was associated with increased rates of testicular cancer, melanoma, brain cancer, esophageal cancer, and prostate cancer.

LeMasters, G.K. et al (2006): Cancer risk among firefighters: a review and meta-analysis of 32 studies. *Journal of Occupational and Environmental Medicine/American College of Occupational and Environmental Medicine*, 48(11), 1189-1202.

- A meta-analysis of 26 studies on cancer occurrence in firefighters reveled that firefighters are at higher risk for multiple myeloma, non-Hodgkin lymphoma, prostate, and testicular cancer.

DRAFT

~~Appendix J:~~

Questions Regarding Fire Testing of Foam Plastic insulation in Codes

Comment [AL19]: Unless extensively edited, this section needs to be clearly credited to the author of the statements written. I do not agree with a significant amount of the content of this Appendix.

As a result of the information presented above and of the discussions of the working group, a series of questions have been raised regarding fire safety requirements in the codes associated with foam plastic insulation. The 30 primary questions are as follows:

Comment [AL20]: Who formulated these questions? I do not recall agreeing upon 30 specific questions.

1. **Are assembly fire tests adequate to determine fire safety in the built environment without the added material fire tests?**

[Question 1 was a bullet point question, page 7 of July 24 report. Answer is new.]

In fact, the codes require a combination of assembly testing and material testing. In the case of foam plastic insulation contained in cavity walls and separated from a habitable compartment, the codes require that foam plastic insulation be: (a) tested to ASTM E84 and obtain a flame spread index ≤ 75 and a smoke developed index ≤ 450 and (b) either be separated by a thermal barrier or comply with the requirements associated with room corner testing (to NFPA 286). The thermal barrier must have been approved by testing via NFPA 275, where there are two tests: a reaction to fire test (with the thermal barrier and the foam plastic insulation tested together) and a fire resistance test, for 15 minutes.

Comment [AL21]: Information about current code requirements and the detailed protocols of testing should be included as Appendices only. (or at least somewhere else in the document…)

NFPA 275 (thermal barrier test) requires that the thermal barrier be tested together with the insulation in the reaction-to-fire test and to control flashover, heat release and smoke release. The permitted reaction-to-fire tests are: UL 1040 (Standard for Fire Test of Insulated Wall Construction), UL 1715 (Standard for Fire Test of Interior Finish Material) or FM 4880 (Approval Standard for Class I Fire Rating of Insulated Wall or Wall and Roof/Ceiling Panels, Interior Finish Materials or Coatings and Exterior Wall Systems), each with the pass/fail criteria included in the standard and NFPA 286 (with the pass/fail criteria included in NFPA 275, namely no flashover, a peak heat release rate ≤ 800 kW, total smoke released ≤ 1,000 m2 and no flame spread to the extremities of wall or ceiling; see Appendix D). The fire resistance test is conducted in accordance with the same time-temperature curve as the ASTM E119 test but for a period of 15 minutes and with a smaller sized specimen.

In 1928, Simon Ingberg, of the National Bureau of Standards, published a paper on the severity of fire in which he equated the gross combustible fuel load (combustible content in mass per unit area) to the potential fire exposure in terms of duration of exposure to a fire following the standard

(ASTM E119) fire curve. This means that Ingberg demonstrated that the standard ASTM E119 fire curve was representative of the typical severity of the fires associated with combustible contents present in buildings in the 1920's (i.e. their fire load) [Tests of the Severity of Building Fires by SH Ingberg, NFPA Quarterly, Vol. 22, pp. 43-61, 1928]. Studies by UL [Impact of Ventilation on Fire Behavior in Legacy and Contemporary Residential Construction, by Stephen Kerber, Thomas Fabian and Pravinray Gandhi (UL), 2008] where full scale experiments were conducted to examine the changes in fire development in modern room's contents versus that that may have been found in a house in the mid-20th century. The modern rooms utilized synthetic contents that were readily available new at various retail outlets, and the legacy rooms utilized contents that were purchased used from a number of second hand outlets. The rooms measured 12 by 12 ft., with an 8 ft. ceiling and had an 8 ft. wide by 7 ft. tall opening on the front wall. Both rooms contained similar types and amounts of like furnishings. Both rooms were ignited by placing a lit candle on the right side of the sofa and allowed to go to flashover and maintain flashover for a period of time before being extinguished. The fire in the modern room transitioned to flashover in 3 minutes and 30 seconds while the fire in the legacy room did the same (with a slightly lower peak temperature) after 29 minutes and 30 seconds. It is clear that modern rooms result in hotter fires that go to flashover faster, so that the time temperature curve of the ASTM E119 fire test (which is based on the fire growth in legacy rooms) is less likely to be representative of the actual fire hazard. Therefore protection required in the 21st century must be at least as high as that required in the 1970s.

Note that the codes do not require that penetrations (such as those for wires and cables, pipes or conduits) through the thermal barrier be fire-stopped, meaning that heat, flames and combustion products can penetrate the thermal barrier and enter the habitable environment.

2. Are the current fire test methods used in the codes the correct test methods to provide the correct level of fire safety?

[Question 2 was a bullet point question, page 7 of July 24 report. Answer is new.]

The fire safety record of foam plastic insulation, when installed in accordance with modern codes, has been excellent, while there have been abundant examples of tragedies associated with the use of inappropriately used foam plastic insulation. The most severe examples have been three cases of nightclub fires where foam plastic insulation was used exposed (without a thermal barrier) resulting in multiple fatalities. These were the Station Nightclub in West Warwick, RI (100 fatalities in February 2003), the Cromagnon nightclub in Buenos Aires, Argentina (194 fatalities, December 2004) and the Kiss nightclub in Santa Maria, Brazil (242 fatalities in January

2013). This and other examples of foam plastic fire experience have been studied recently, both for the US [D.H. Evans and M.M. Hirschler, "Foam Plastics in Building Construction", Session T44, NFPA Annual Meeting June 2014, Las Vegas, NV] and internationally [N. White, "Fire Hazards of Exterior Wall Assemblies Containing Combustible Components", Session W22, NFPA Annual Meeting, June 2014, Las Vegas, NV].

It is of interest, in this connection, that NFPA fire statistics (e.g. M. Ahrens, 2011), show that insulation within a structural area was not a key factor in causing fire fatalities or fire injuries because the fire safety measures implemented are working well. The statistics show that insulation within a structural area was the primary item contributing to flame spread in only 2% of US home structure fires, due to its proper protection. These numbers translate to no fire fatalities and only 40 injuries (1% of all fire injuries from such fires).

DRAFT

3. Should ISO 9705 be used as the room-corner fire test instead of NFPA 286?

[New question and answer]

Note that ISO 9705 is a room-corner test, similar to NFPA 286, used in Europe for assessing when materials go to flashover but not used in US codes. The difference between NFPA 286 and ISO 9705 is that the former uses incident heat sources of 40 kW and 160 kW while ISO 9705 uses heat sources of 100 kW and 300 kW. Moreover, in US codes the room-corner test is used to assess whether a material or product reaches flashover (plus other criteria, see Appendix D), while ISO 9705 is used to assess simply after what time period a tested specimen goes to flashover.

4. [NEW] Is there a correlation between the required fire test results and the actual fire safety that the codes need to address?

[Question 4 was a bullet point question, page 7 of July 24 report. Answer is new.]

Both recent work ["Flame retardants and heat release: review of traditional studies on products and on groups of polymers", by M.M. Hirschler and "Flame retardants and heat release: review of data on individual polymers", by M.M. Hirschler (both Fire and Materials 2014, published online] and earlier work [e.g. Babrauskas et al., 1988] have shown that heat release rate (HRR) can be reduced, and time to ignition (TTI) increased, if sufficient levels of the appropriate systems of flame retardants are added.

There was a question as to why these experiments used mixtures of different flame retardants and the fact is that combinations of flame retardant systems may be necessary to get the appropriate improvement in fire performance for each system.

There was a question as to whether the standard commercial insulation products have HRR and TTI values that are substantially and meaningfully different from those of the corresponding materials that do not contain flame retardants. Data obtained for heat release of rigid polyurethane foam and polyisocyanurate foam in the cone calorimeter heat release test (ASTM E1354) demonstrate very significant levels of improvement on heat release rate. In the case of rigid polyurethane foam the improvement in heat release rate (shown in Appendix F as Table 1) is 40%, while it is 46% for polyisocyanurate foam (shown in Appendix F as Table 2). Data on heat release of solid polystyrene in the cone calorimeter also show high improvements in the range of 40-60% in heat release rates depending on the system, using a variety of different flame retardant additive systems (shown in Appendix F as Tables 3-8). Data on heat release in small scale tests (like the cone calorimeter) is very difficult to obtain for polystyrene foam because of its physical properties (the way it melts and shrinks). However, limited data, showing some 20% improvement can be found in foamed EPS (shown in Appendix F as Table 9).

More important, the positive effect of flame retardants on the fire performance of polystyrene foam is demonstrated by the fact that improvements are found by using different tests, including both ASTM E84 (in the US) and the Single Burning Item test (EN 13823) and the small burner test (ISO 11925-1) in the European Union [Compilation of International Building Regulations (Fire) Relevant for EPS/XPS, by Per Blomqvist, Margaret Simonson McNamee and Per Thureson, in SP Technical Note 10 (2010)]. Similar results are found with other foam plastic insulations (polyurethane and polyisocyanurate). In all cases the fire performance of the flame retarded foam plastic insulation material is improved over that of the non-flame retarded material.

Additional information on the effect of flame retardants on polyurethane foam (flexible foam) can be found in data from an analysis of the Station Nightclub fire ("NIST NCSTAR 2: Vol. I, Report of the Technical Investigation of The Station Nightclub Fire", William Grosshandler, Nelson Bryner, Daniel Madrzykowski, Fire Research Division Building and Fire Research Laboratory, National Institute of Standards and Technology, and Kenneth Kuntz, Federal Emergency Management Agency, U.S. Department of Homeland Security, June 2005, page 74). Table 4.2 from the NIST report is shown in Appendix G.

5. Specifically, does the ASTM E84 fire test accurately predict the performance of foam plastic insulation under real-world fire conditions?

[Question 5 was Assertion 1, page 8 of July 24 report. Answer was expanded. The original one sentence answer was never accepted last report.]

The 2012 paper by Vytenis Babrauskas et al (Babrauskas, V. et al. "Flame retardants in building insulation: a case for re-evaluating building codes", Building Research and Information, 40:6, 738 – 755, 2012) affirms that the ASTM E84 test does not accurately predict the fire performance of foam plastic insulation under real-world fire conditions. It states that the Steiner tunnel fire test results for flame spread index (FSI) do not correlate well with other fire test results, such as room-corner tests. It states that materials with low FSI (< 25) values can show very short times (< 2 min) to flashover. It also states, conversely, that some materials with high FSI (> 60) values appear to have flashover times as long as 15 minutes. As such, it states that ASTM E84 tests for polymeric foams do not accurately predict expected fire performance.

It is correct, in fact, that some low flame spread index results can be associated with poor fire performance but high flame spread index results are always associated with poor fire performance. However, note, that information based on other fire tests demonstrates that foam plastic insulation materials that are flame retarded (and perform better in the ASTM E84 test) also exhibit better fire performance in other tests. For example, all foam plastic insulation materials are required by their listings and, often also by their specifications (such as ASTM C578 for polystyrene), to meet a fire test (such as ASTM E84 and, in some cases also ASTM D2863 or the oxygen index, or LOI) before they can be placed on the market. All commercial polystyrene foam materials must comply with the ASTM C578 standard specification, which requires them to exhibit an LOI of 24 (higher, meaning better fire performance, than the LOI of non-flame retarded polystyrene, which is 17). Also, cone calorimeter testing (Appendix E) and European fire testing (see above) have demonstrated that flame retarded foam plastic insulation materials exhibit better fire performance than the non-flame retarded equivalents. Thus, compliance with ASTM E84 requirements is simply a tool to ensure that the foam plastic insulation has sufficiently acceptable fire performance to be included in the assembly fire test.

6. Does the code require assembly fire tests or material fire tests or both?

[New question and answer]

As shown in the summary of fire test requirements in the code in Appendix D, the code requires a combination of a material fire test (usually ASTM E84) and an assembly fire test. Foam plastic insulation is not permitted, by code, to be used without an approved thermal barrier in the habitable environment (cavity walls, roofs, etc.). Standard half inch gypsum board is an approved

thermal barrier, acceptable for use with listed foam plastic insulations (which are flame retarded). Other thermal barriers are approved as a result of testing to NFPA 275, in conjunction with the foam plastic insulation intended for use, which is always flame retarded. The thermal barrier is necessary and sufficient to prevent foam from igniting in the event of a room fire until well after flashover has occurred. Note that 23/32 inch wood structural panel has been added to the IRC residential code as an approved thermal barrier, in spite of being a combustible material that fails the NFPA 275 test. It has not been added to the California code.

The codes require that foam plastic insulation materials comply with a flame spread index of ≤ 75 and a smoke developed index of ≤ 450 (Class B) in accordance with ASTM E84 (or UL 723) in order to be able to be qualified for conducting the following fire tests as an assembly: ASTM E108 or UL 790 (roofing), ASTM E119 or UL 263 (fire resistance), FM 4450 (roofing), FM 4880 (interior finish), NFPA 275 (thermal barrier), NFPA 285 (multi-story facades), NFPA 286 (room-corner), UL 1256 (roofing) and UL 1715 and UL 1040 (interior finish). The following evaluation reports all require testing of the foam plastic insulation to ASTM E84 (or UL 723) as a material test: AC 04, AC 05, AC 12, AC 71, AC 161, AC 214, AC 239, AC 263, AC 309, AC 315 and AC 377.

7. Are thermal barriers adequate to prevent ignition of the foam plastic insulation installed behind the thermal barrier?

[New question and answer]

The question has been raised as to whether commercial flame retarded foam plastic insulation products will lead to room flashover if when exposed to a large fire source in the absence of a thermal barrier. In fact, undoubtedly, the most widely used foam plastic insulation materials, such as EPS, XPS, SPU and PIR, are likely to cause flashover when exposed to the ignition source of NFPA 286 (a 40 kW burner followed by a 150 kW burner) in the absence of a thermal barrier complying with NFPA 275, even when they have been flame retarded. Some other, more specialized, foam plastic insulation materials will not reach flashover under those conditions.

The second part of this question is whether an approved thermal barrier prevents the flame retarded foam plastic insulation materials from being ignited, when exposed to the same ignition source. It is not known whether or not standard fire resistant gypsum board or other NFPA 275 compliant thermal barriers are sufficient to prevent foam plastic insulation materials from igniting in the event of a room fire until well after flashover has occurred, because that is not a required criterion for approval of a thermal barrier. A thermal barrier is approved if it meets two criteria (as shown above): it meets the corresponding pass-fail criteria when tested to NFPA

DRAFT

286, UL 1715, UL 1040 or FM 4880 in conjunction with the listed foam plastic insulation (reaction-to-fire test or integrity fire test in NFPA 275) and it meets the temperature rise criteria when tested to the fire resistance (or temperature transmission) fire test in NFPA 275 (based on the ASTM E119 time temperature curve). None of these criteria involve assessing whether the foam plastic insulation ignites. The key issue is whether the system generates too much heat release. The members of the working group are not aware of any fire tests that have been conducted to assess whether or not a thermal barrier would prevent a foam plastic insulation material that is not flame retarded from igniting when exposed to a certain ignition source.

Thus, there is no answer to the question that has been asked as to whether, if the thermal barrier prevents foam plastic insulation (whether flame retarded or not), from igniting, the added flame retardants added to the foam plastic insulation improve fire safety. In fact, all listings of foam plastic insulation and of thermal barriers are based on tests conducted with foam plastic materials that comply with the code requirements for ASTM E84 testing. Furthermore, the primary issue is not preventing ignition of the insulation but ensuring that the fire does not spread into other compartments.

8. Do the flame retardants in commercial foam plastic insulation materials prevent the foam insulation materials from burning?

[New question and answer]

Foam plastic insulation materials are combustible materials. A combustible material is often defined as "a material that, in the form in which it is used and under the conditions anticipated, will ignite and burn" or "a material that does not meet the definition of noncombustible material". Thus, a combustible material will burn, depending on the conditions of exposure, if the exposure conditions are severe enough. The addition of flame retardants to combustible materials will not transform them into noncombustible materials. Consequently, the flame retardants in commercial foam plastic insulation materials will not prevent the foam insulation materials from burning, depending on the conditions of exposure.

9. Are thermal barriers required in all areas in the construction environment?

[Question 9 was Assertion 4, page 9 of July 24 report. Answer was expanded. The original answer was never accepted into report.]

Thermal barriers are not always required to protect for foamed plastic insulation materials (see Appendix D for the list of requirements for insulation materials in codes). Ignition barriers are often required in lieu of thermal barriers in certain occupancies (see IBC, IRC, Spray Polyurethane Foam Alliance (SPFA), ICC ES). The following wording is extracted from the

recommendations by SPFA, for information: "Ignition barriers do not afford as high a degree of protection from fire as thermal barriers but are considered acceptable for attics and crawl spaces where entry is limited. Building code authorities may accept alternative ignition barrier materials and/or alternative assemblies based on large-scale tests such as outlined in ICC -ES Acceptance Criteria 377, Appendix X."

The code recognizes the following eight ignition barrier materials to protect foam plastic insulation materials in attics and crawl spaces where entry is limited only for the purposes of repair or maintenance:

1. ½ inch thick (38 mm) mineral fiber insulation,
2. ¼ inch thick (6.4 mm) wood structural panels,
3. 3/8 inch (9.5 mm) particleboard,
4. ¼ inch (6.4 mm) hardboard,
5. 3/8 inch (9.5 mm) gypsum board,
6. corrosion-resistant steel having a base metal thickness of 0.016 inch (0.406 mm),
7. 1 ½ inch thick (38 mm) cellulose insulation
8. ¼ inch (6.4 mm) fiber-cement panel, soffit or backer board.

10. What is the difference between a thermal barrier and an ignition barrier?

[New question and answer.]

As discussed above, thermal barriers are materials that comply with the requirements of NFPA 275 (including both a reaction-to-fire and a fire resistance test) in conjunction with an approved or listed foam plastic insulation material (which, in turn, complies with requirements based on ASTM E84). Two other materials are accepted by codes as thermal barriers: ½ inch gypsum board and (in the 2015 IRC) 23/32 inch (18.2 mm) wood structural panel. On the other hand, ignition barriers are eight types of material, as listed above (in 5.2.9). Ignition barriers are only allowed in attics and crawl spaces where entry is limited only for the purposes of repair or maintenance and are not expected to protect the foam to the same degree as thermal barriers.

11. If ASTM E84 does not provide meaningful fire test data for foam plastic insulation materials, should this test continue to be required as a certification test for such materials?

[Question 11 was Assertion 6, page 10 of July 24 report. Answer was expanded. The original answer was never accepted into report.]

There is no data to confirm that foam plastic insulation materials without flame retardants can successfully meet the requirements of the existing code requirements for thermal barrier fire tests, or that the foam plastic insulation materials would be adequately protected by current ignition barriers, which

are generic and do not require testing. If flame retardants were removed from foam plastic insulation materials, the majority of existing systems would be invalidated. Moreover, the most widely used commercial foam plastic insulation materials require the addition of flame retardants in order to meet the ASTM E84 requirements in codes. On the other hand some specialized foam plastic insulations exist that can meet the code requirements based on the NFPA 286 room-corner test and be used without thermal barriers, in some cases without using flame retardants. Finally, as discussed above, multiple other fire tests have demonstrated that foam plastic insulation materials exhibit better fire performance when they have been adequately treated with flame retardants.

All foam plastic insulation materials are required by their listings and, often also by their specifications (such as ASTM C578 for polystyrene), to meet a fire test (such as ASTM E84 and, in some cases also ASTM D2863 or the oxygen index) before they can be placed on the market. As discussed above some specialized foam plastic insulation materials can meet the code requirements of NFPA 286 and do not need the thermal barrier. All foam plastic insulation materials must have been tested to ASTM E84, irrespective of whether they need the thermal barrier or not. Undoubtedly the protection afforded by ignition barriers is much less than that afforded by thermal barriers and that is why they are permitted only in attics and crawl spaces where entry is limited.

12. Do reports on facade structure fires show that polystyrene foams are a significant fuel source for fast spreading fires?

[Question 12 was support item "2)" for Assertion 6, page 11 of July 24 report. Answer was expanded. The original answer was never accepted into report.]

The vast majority (if not all) the cases studied where there have been façade fires involving foam plastic insulation with fast flame spread have been shown to be cases where the type of fire protection required by US codes was absent. Two recent studies have looked at such fires, both in the US [D.H. Evans and M.M. Hirschler, "Foam Plastics in Building Construction", Session T44, NFPA Annual Meeting June 2014, Las Vegas, NV] and internationally [N. White, "Fire Hazards of Exterior Wall Assemblies Containing Combustible Components", Session W22, NFPA Annual Meeting, June 2014, Las Vegas, NV].

One of the fires investigated was the Monte Carlo casino façade fire in Las Vegas, NV, in 2008 (Beitel, Jesse and Evans, D.H., "The Monte Carlo Exterior Façade Fire - Lessons learned from the forensics investigation of the 2008 fire in Las Vegas", in Fire Protection Engineering, http://magazine.sfpe.org/fire-investigation/monte-carlo-exterior-facade-fire,

2011). This was a fire that occurred in the façade of a large casino in Las Vegas on January 25th 2008 and took over 1 hour to bring under control; no fatalities or injuries. The fire was caused by welding on a catwalk on the roof parapet wall - a 30 ft. (9 m) high screen wall. The exterior cladding materials first ignited on the left side (as viewed from the exterior) of the central core area. The fire then progressed laterally. The adjacent materials on the right and left of the central core facade began to burn and the fire continued to propagate laterally over these decorative materials and cladding materials. Over time, the fire on the west tower moved laterally approximately 80 ft. The detailed investigation of this fire showed that the façade had two types of combustible material: an EIFS (Exterior Insulation and Finish System, complying with the code) and "decorative non-EIFS materials used for ornamentation". These decorative materials included the horizontal band at the 29th floor, the horizontal band at the top of the 32nd floor, the railing at the top of the parapet wall and are believed to include the medallions between the windows on the 32nd floor, and the primary contributor to the progression of the fire was the combination of materials in the decorative band at the top of the wall, the decorative band at the top of the 32nd floor (EPS with a polyurethane resin coating) and the undetermined materials in the medallions. Flaming droplets and burning pieces of EPS and/or polyurethane caused ignition of the large decorative band at the 29th floor, where this decorative band was composed of EPS and had a non-EIFS coating.

The other key fire mentioned by members of the working group was the Water Club Tower fire at the Borgata Casino in Atlantic City, NJ, in 2007 (Foley, James M., "Modern Building Materials are Factors in Atlantic City Fires", Fire Engineering, http://www.fireengineering.com/articles/2010/05/modern-building-materials-are-factors-in-atlantic-city-fires.html, May 1, 2010). The fire, on September 23, 2007, involved a tower under construction that was a separate building from the existing casino. There were no fire fatalities or injuries. According to reports of the construction workers, the flames were 30 feet above the roof on the 41st floor. As firefighting crews were organized and assigned, the fire began to subside, as all of the available fuel was being rapidly consumed. Within 10 to 15 minutes, the bulk of the fire had subsided, and only burning window frames and spot fires remained on the 35 stories of charred structure. The investigation revealed that white aluminum composite panels were used in the exterior wall of the structure as a decorative finish (composite panels with 1/8 inch Aluminum sheets with ¼ inch polystyrene foam in the center). The panels were intended to appear like a sail on the side of the new high-rise tower. There was a concrete shear wall 6 ft. behind these exterior panels that prevented major fire extension into the interior of the building. There were no direct openings into the

interior portion of the void space other than on the third floor and the roof on the 41st floor. An investigation by the Atlantic City fire department built wall panels set into aluminum frames and covered, at the rear, by ¾ inch foamed polystyrene insulation with no fire barrier. The polystyrene foam insulation was flame retarded. To ensure that the same polystyrene foam insulation product was used for the tests as was used on the building in question, the fire marshal acquired samples from the contractor and conducted full-scale fire testing at the Atlantic County Fire Academy. Vertical burn tests of the polystyrene verified that this material was not the one that accelerated the fire 38 stories in minutes. The polystyrene material would shrink and produce carbon particulate, but it was not the primary or secondary fuel source in this fire. The wall panels themselves were then acquired and erected at the fire academy in the burn building and subjected to fire exposure from small to large heat sources to determine how much energy was necessary to get the panels to ignite. After extensive small-scale testing of the panel, it was discovered that the only way to involve the panels was to apply significant heat quickly to the panel, causing the polystyrene to liquefy and burn like a flammable liquid. In the tests conducted on a full-scale panel, a bale and a half of dry hay were necessary to replicate the burn effects the fire department witnessed at the fire scene that day. This fuel source was sufficient enough to cause the aluminum to deform and the polystyrene to liquefy and delaminate from the aluminum facings. Further small-scale and large-scale fir tests were conducted at the ATF (Bureau of Alcohol, Tobacco and Firearms) laboratory in Beltsville, MD. ATF results indicated that to ignite the panel, would require "at least 250 to 400 MW/m3 of heat applied to the panel surface", a very considerable heat input. The International Code Council (ICC) approved the exterior panels involved in this fire and which are used all over the world. Typically in exterior wall construction, these panels would be protected by fire-resistant drywall on the interior side, once construction is complete. The potential danger involves fire exposure from an adjacent structure.

13. Do Steiner Tunnel (ASTM E84) fire test results for flame spread index (FSI) correlate well with other fire test results, such as corner tests? Are there situations where ASTM E84 does not provide meaningful data regarding the suitability of the material tested?

[Question 13 was support item "a)" for Assertion 6, page 11 of July 24 report. Answer was expanded. The original answer was never accepted into report.]

In fire testing it is very rare for the results of one fire test to correlate with those of another fire test. The most notable exception to this rule is the case of tests at two different scales that assess the same property, such as heat release rate. For example, it has been shown that heat release in the cone

calorimeter (a small scale test) often correlates with heat release in some (but not all) large scale tests, especially when the geometry is similar (such as in the case of vertical or horizontal surfaces).

However, it is often the case that materials or products that show improved fire performance in one fire test will also show improved fire performance in other fire tests, even if the results do not necessarily correlate with each other. In the case of foam plastic insulation materials, multiple fire tests have indicated that the addition of flame retardants improves the fire TEST performance. As discussed above, no correlations but similar improvement trends for foam plastic insulation materials have been found with the Steiner tunnel test, ASTM E84, the cone calorimeter, the oxygen index (ASTM D2863) and the European Union fire tests.

Work conducted at the time that the room-corner test (NFPA 286) was incorporated into the building code demonstrated that, in general, materials that perform well in NFPA 286 also perform well in ASTM E84. Similarly, materials that perform badly in ASTM E84 perform badly in NFPA 286. However, it is also well known (and discussed above) that some materials (especially those that very thin, those that are very light weight and those that melt and drip before the flame front has reached the test specimen) can give adequate results in the ASTM E84 and poor results in NFPA 286.

Note that the codes do not require that foam plastic insulation materials exhibit exceptional fire performance but simply that they achieve a flame spread index of ≤ 75 (Class B). Thus, it is to be expected that most materials that exhibit such a flame spread index will fail the code requirements based on NFPA 286. Thus, a direct correlation between the tests, based on code requirements, is not meaningful.

14. Do commercial flame retarded foam insulation materials contribute significantly to a fire when there is no thermal barrier?

[Question 14 was support item "b)" for Assertion 6, page 11 of July 24 report. Answer was expanded. The original answer was never accepted into report.]

Foam plastic insulation materials are not permitted to be used without an approved thermal barrier in the habitable environment, unless they meet the requirements based on NFPA 286 or another one of the accepted large scale tests (UL 1040, UL 1715 or FM 4880). Thus, those commercial foam plastic insulation materials that meet the large scale fire test requirements will not contribute significantly to a fire while those that require a thermal barrier will burn more vigorously if installed under conditions not accepted by the codes.

15. Is standard fire resistant gypsum board or other NFPA 275-compliant thermal barrier necessary and sufficient to prevent foam from igniting in the event of a room fire until well after flashover has occurred?

[Question 15 was support item "c)" for Assertion 6, page 11 of July 24 report. Answer was expanded. The original answer was never accepted into report.]

It is not known whether or not standard fire resistant gypsum board or other thermal barriers complying with NFPA 275 are sufficient to prevent foam from igniting in the event of a room fire until well after flashover has occurred. That is not what the code requires. The code requires that all approvals of foam plastic insulation and of thermal barriers be based on tests conducted with foam plastic materials that comply with the code requirements for ASTM E84 testing. Furthermore, the primary issue is not preventing ignition of the insulation but ensuring that the fire does not spread into other compartments.

16. Is fire propagation in the wall cavity primarily a function of cavity geometry and size and, thus, does FSI play any significant role?

[Question 16 was support item "d)" for Assertion 6, page 11 of July 24 report. Answer was expanded. The original answer was never accepted into report.]

Fire propagation in any fire scenario is affected to a very large degree (probably more than anything else) by the heat release rate of the combustible materials and it has been shown that flame retardants decrease heat release rate. Babrauskas and Peacock demonstrated, in 1992, that it is heat release rate that controls most other fire properties.

17. In view of the fact that heat release rate is a function of incident heat flux (since higher incident heat fluxes generate higher heat release rates), do flame retardants create a meaningful difference at flashover?

[Question 17 was the first half item "3a)", page 14 of July 24 report. Answer was expanded. Answer was expanded. Answer is expanded and new. Original answer was never accepted into the report.

It is well known that heat release rate increases with incident heat flux; this has been demonstrated for both all materials and wood materials (e.g. see "Heat release from plastic materials", M.M. Hirschler, Chapter 12a, pp. 375-422, and "Wood Materials – Experimental Data on Wood Materials", H.C. Tran, Chapter 11b, pp. 357-372, both in "Heat Release in Fires", Elsevier, London, UK, Eds. V. Babrauskas and S.J. Grayson, 1992..). The key fire safety interest is in preventing flashover and/or delaying high heat release in rooms away from the room of origin after flashover, because once flashover

has occurred survival in that room is impossible. Data described above shows that flame retardants decrease heat release.

18. What heat fluxes are to be expected at flashover?

[Question 18 was the second half of item "3a)", page 14 of July 24 report. Answer was expanded. Answer is expanded and new. Original answer was never accepted into the report.]

NFPA 286 uses as one of the criteria for flashover a heat flux to the floor of 20 kW/m2. On the other hand, heat fluxes to the ceiling and to the walls will probably have to be higher than those for flashover to occur. It is not possible to have a firm heat flux that is associated with flashover because that would be a function of the surface to be investigated.

The NFPA Glossary of Terminology uses a definition for the term "flashover" that reads as follows and originates in NFPA 555 (Guide on Methods for Evaluating Potential for Room Flashover): "A stage in the development of a contained fire in which all exposed surfaces reach ignition temperature more or less simultaneously and fire spreads rapidly throughout the space." Thus, the concept of flashover is associated with burning of all exposed surfaces rather than with a specific heat flux.

19. Since a series of reports appear to indicate that improperly applied spray foam insulation can spontaneously ignite during the exothermic curing process, or during spraying if an ignition source is present, is information available regarding the flammability of the separate components of spray foam insulation and what does this information tell us about the comparative safety of the flame retarded and non-flame retarded versions during transport or construction? What studies, if any, have been conducted on the flammability of the two SFI components?

[Question 19 was item "4)", page 14 of July 24 report. Answer was expanded.]

It has been described in several newspaper reports published online (examples are those by Gouveia, 2011 and Holladay, 2011), that improperly applied spray foam insulation can spontaneously ignite during the exothermic curing process, or during spraying if an ignition source is present. The newspaper stories referenced talk about fires that occurred in which spray foam insulation contributed to the fire, probably following improper installation that did not follow the manufacturers' installation instructions or the instructions from the Spray Polyurethane Foam Industry and from ICC ES (http://www.icc-es.org/News/Articles/AY126ThermalBarriersSPF2011-51811.pdf). Spray polyurethane foam is a combustible material and, thus, will burn if improperly applied. Moreover, the process of mixing the two components

that create spray polyurethane foam insulation is an exothermic reaction and thus installation must be done with the proper care.

There are no published studies available on fire testing of the components of spray polyurethane foam as they are not actual building materials. Spray polyurethane foam is not transported as such but the two components (an isocyanate and a polyol) are combined on site during application. Thus transport of the foam is not relevant, particularly since the codes do not address the transport phase. Codes do address construction and renovation, particularly the International Existing Building Code (IEBC) and there is abundant evidence that fire hazard is greatest during construction and renovation and it is the time when the highest level of precautions needs to be taken.

20. Will foam plastic insulation materials burn more vigorously or ignite more easily if they do not comply with the requirements based on ASTM E84?

[New question and answer.]

The key parameter that assesses whether a material burns "more vigorously" is the peak heat release rate (as demonstrated by Babrauskas and Peacock). As discussed above, properly flame retarded materials exhibit lower peak heat release rate than their non-flame retarded versions. In many cases the addition of flame retardants does slow the ignition process but that is not always the case. Note, however, that compliance with ASTM E84 alone is not sufficient for foam plastic insulation materials to be installed in the habitable environment.

21. Is there an alternative to ASTM E84 to create foam plastic insulation materials that comply with code requirements?

[Question 21 was a bullet on page 15 of July 24 report. Answer is new.]

The fire safety of the insulation presently used in the built environment, when the building complies with the code, is adequate and has prevented and minimized the effects of fires, thus saving lives and protecting property. Therefore it is probably necessary that any type of insulation used in the built environment should undergo a fire test. At present no other fire test has been developed and has gone through the consensus process in order to ensure that fire test results with the alternate fire test are at least equivalent to those with ASTM E84. It is probably that an alternate fire test could be developed and standardized to replace ASTM E84 but it is not available at present. It is important that the insulation be subjected to a fire test irrespective of whether the insulation is protected by a barrier (ignition barrier or thermal barrier) because such barriers are usually not noncombustible materials. Note that virtually all thermal barrier materials

(and even gypsum board) fail the test for determining that a material is a noncombustible material, namely ASTM E136).

22. What are the fire safety impacts of foam plastic insulation without flame retardants on new buildings undergoing construction or on existing buildings undergoing renovation or reconstruction?

[Question 22 is an expanded bullet point from page 16 of July 24 report. Answer is new.]

As discussed above, both the IBC and the IEBC address the fire safety of buildings under construction and/or renovation and evidence shows that those are periods when the potential for serious fires is greatest and that special precautions are needed.

23. What would be the impact on fire safety of a trade-off allowing for non-flame retarded foam plastic insulation when buildings are fully sprinklered?

[Question 23 is an expanded item from page 19 of July 24 report. Answer is new.]

In California all new residential construction is required to be sprinklered. Therefore, such a trade-off is not significant because all new buildings will be sprinklered. The California State Fire Marshal office is committed to the combination of both active sprinkler protection and adequate passive protection.

24. What insulation materials need to be addressed by this working group?

[Question 24 is a bullet point from page 16 of July 24 report. Answer is new.]

CA AB 127 addressed all insulation materials but the Working Group has been focusing primarily on foam plastic insulation materials, and particularly those that are most commonly used in residential construction, which generally necessitate the addition of flame retardants to comply with code requirements. Another category of insulation materials of particular interest, for example, are cellulose loose-fill insulation materials. Those materials, as shown above, must comply with US Consumer Product Safety Commission regulation, which includes passing two fire tests included in 16 CFR 1209 and being labeled in accordance with 16 CFR 1404. The fire tests involve assessing acritical radiant flux and not spreading fire via smoldering; such fire performance is achieved only through the addition of flame retardant systems.

DRAFT

25. What is the effect of the flame retardants added to foam plastic insulation on the acute toxicity of fire atmospheres? What are the hazards associated with toxic chemicals found in the smoke produced during structural building fires?

[Question 25 is new question stemming from several parts of the 16 of July 24 report. Answer is new.]

The toxicity of smoke in a fire is a function of four factors; the amount of materials burnt; the distribution of combustion products within the smoke; the individual toxic potencies of each combustion product found in the vapor phase; and the duration of exposure. Clearly, the greater the amount of longer material burnt the greater the toxicity of the smoke. In fact although roughly two-thirds of fire victims die from the effects of smoke inhalation, it is extremely rare for the root cause of their deaths to be that the smoke comes from a specific very toxic material. Fire fatalities are usually the result of inhaling too much smoke of average toxicity. More than 83 percent of fire deaths in building fires in the United States occur in fires that have become very large so that they extend beyond the room of origin, and thus generate too much toxic smoke [Gann, R.G., Babrauskas, V., Peacock, R.D. and Hall, J.R., Jr., "Fire Conditions for Smoke Toxicity Measurement", Fire and Materials, 18, 193-99 (1994).]. This means that very few people actually die in fires that are small and that fire deaths are rarely due to burning or heat effects, even in small fires. All combustible materials release carbon monoxide (CO), an asphyxiant, when they burn. Once a fire has reached flashover roughly 20 percent of the mass lost from the combination of any material has been converted into carbon monoxide (CO). This is almost irrespective of fuel composition or ventilation. Most fire fatalities occur only after flashover. A pair of studies made in the United States involving more than 5,000 fatalities2,3 [Debanne, S.M., Hirschler, M.M. and Nelson, G.L., "The Importance of Carbon Monoxide in the Toxicity of Fire Atmospheres", 1992, in "Fire Hazard and Fire Risk Assessment", ASTM STP 1150, Amer. Soc. Testing and Materials, Philadelphia, PA, Ed. M.M. Hirschler, pp. 9-23 and Hirschler, M.M. (Editor-in-Chief) and Debanne, S.M., Larsen, J.B. and Nelson, G.L., "Carbon Monoxide and Human Lethality - Fire and Non-Fire Studies", Elsevier, London, UK, 1993.] demonstrated that there is an excellent correlation between fire fatalities and levels of carbon monoxide absorbed in the blood as carboxyhemoglobin (COHb) and that the distribution of COHb concentrations was identical (when comparing populations of the same type) between fire and non-fire deaths (e.g. defective space heater) . The studies also showed that whenever high levels of hydrogen cyanide (another asphyxiant) were found in blood, high levels of COHb were also found, indicating that hydrogen cyanide is of minor consequence in the overall study of fire fatalities. The studies also showed that fatalities can be linked to COHb levels as low as 20 percent and that it is likely that any COHb level above 30-40 percent is lethal. The overall

conclusion of this work, the most extensive ever conducted, is clear: fire fatalities are overwhelmingly associated with the carbon monoxide generated when fires become big, and other causes of fire deaths are of minor importance. Similar conclusions were obtained earlier by other authors, with smaller data bases.

Thus, the most immediately dangerous chemicals produced during all fires are those that behave as chemical asphyxiants such as carbon monoxide, which is responsible for most deaths in fires, and hydrogen cyanide along with irritants such as hydrogen halides or oxides of nitrogen.

26. What is the effect of the flame retardants added to foam plastic insulation on the long-term (chronic) toxicity of fire atmospheres?

[Question 26 is new question stemming from several parts of the 16 of July 24 report. Answer is new.]

Firefighters are, justifiably, most concerned not about the acute exposures in fires but about the chronic or repeated exposures to those carcinogenic chemicals and particulate matter that are found, at low levels, during the overhaul phase after the primary fire is extinguished or "knocked down". According to the **IARC** monograph, nine known human carcinogens (Group 1), four probable human carcinogens (Group 2A), and 21 possible human carcinogens (Group 2B) or a total of 34 known and possible human carcinogens have been detected in smoke from experimental and actual building fires reported in the literature. Notably, all burning materials also produce significant concentrations of polynuclear aromatic hydrocarbons or polycyclic aromatic hydrocarbons (**PAH**), including benzo[a]pyrene [BAP], many of which are carcinogenic. In fact, BAP is the one combustion product with the highest level of toxic carcinogenicity.

Formation of trace amounts of polychlorinated dioxins and furans (**PCDD/F**) or polybrominated dioxins and furans (**PBDD/F**) occurs during high temperature production or during recycling of plastics that contain halogenated flame retardants and the levels of dioxins and furans are highest when halogenated aromatic flame retardants are present (Ebert and Bahadir, 2003 and Bahadir et al., 1999). Since some halogenated dioxins fall into the category of known human carcinogens, some researchers have analyzed smoke and soot residues to determine their concentrations during and after fires. Wobst et al., 1999, analyzed surface residues found in two different private residences where a small kitchen fire occurred with minor damage in one case and a large fire destroyed the entire residence in the second case. They found that the particulate residues contained 96 to 5,000 µg/m2 of polycyclic aromatic hydrocarbons (**PAH**) but only 4 to 1300 ng/m2 of PCDD/F. This means that the particulates contained approximately 4000

to 8000 times more PAH than PCDD/F were present in the small kitchen fire residues. For the large fire, they found 858 to 59,000 µg/m2 of PAH but only 9 to 89 ng/m2 of PCDD/F, meaning that there are over 60,000 more PAH than PCDD/F. Ruokojarvi et al. (2000) conducted simulated house fires in two rooms of a two story apartment in order to collect gas and surface samples to measure dioxin and PAH levels and also found higher levels of PAH compounds but with smaller relative ratios since the amount of furnishings and maximum temperatures were lower than a real fire scenario. Finally, Troitzsch (2000) published an analysis of pollutant data gathered from two well-documented German catastrophic fires (Bahadir et al.) and found that PAH levels were thousands of times higher than those of PCDD/F. Added to this is the fact that the toxicity of PAHs is much higher than that of PCDD/F or PBDD/F. Essentially, all reports to date indicate that polyhalogenated dioxins and furans pose only a very minor exposure risk to firefighters while the risk of exposure to known human carcinogenic components of PAH is extremely high and unaffected by the presence of halogenated compounds in a fire.

27. Are the levels of toxic chemicals in today's structural building fires higher than they were before the widespread use of modern plastics?

[Question 27 is new question stemming from several parts of the 16 of July 24 report. Answer is new.]

During the 1970'S and 1980's there was a belief that burning plastic materials produced smoke that was far more toxic than smoke from burning natural products such as wood, wool, or cotton. A number of studies have been done to compare the amount of carbon dioxide, carbon monoxide, and hydrogen cyanide produced by natural and synthetic materials under flaming and nonflaming conditions in order to model smoke toxicity. This resulted in the development of multiple small scale test methods, all of which gave varied rankings. In summary, however, it has since become clear that the smoke toxicity of virtually all materials is almost identical, within the margin of error (for example: "General principles of fire hazard and the role of smoke toxicity", M.M. Hirschler, in "Fire and Polymers: Hazards Identification and Prevention" (Ed. G.L. Nelson), ACS Symposium Series 425, Developed from Symp. at 197th. ACS Mtg, Dallas, TX, April 9-14, 1989, Amer. Chem. Soc., Washington, DC, Chapter 28, p. 462-478 (1990)., "Fire Retardance, Smoke Toxicity and Fire Hazard", M.M. Hirschler, in Proc. Flame Retardants '94, British Plastics Federation Editor, Interscience Communications, London, UK, Jan. 26-27, 1994, pp. 225-37 (1994). "Fire Safety, Smoke Toxicity and Acidity", M.M. Hirschler, Flame Retardants 2006, February 14-15, 2006, London, pp. 47-58, Interscience Communications, London, UK, 2006.). In the United States, ASTM E1678 and NFPA 269 (virtually the same test) are used to provide lethal toxic potency values (also known as LC50 values) for

use in modeling pre-flashover fire hazard conditions by heating test materials with a radiant flux of 50 kW/m2. Note that a lower LC50 value corresponds to a higher smoke toxicity. This bench test data has been compared to room scale fire tests under post-flashover conditions by Babrauskas et al. (1991) in a NIST study and found to be accurate within a factor of three with an adjustment for the very high carbon monoxide post-flashover values that cannot be replicated in the bench test, meaning that there is no statistical difference between the smoke toxicity of materials. It is noteworthy that the NIST data shows that the LC50 value for Douglas Fir is >70 mg/l and the value for the rigid foam tested is 30-40 mg/l for the real scale room test while their respective values in the NBS cup furnace bench tests are 41-51 for Douglas fir and 10-13 for the rigid foam. Others have done bench scale tests to compare rigid foam to natural products using the German DIN 53436 toxicity test method and found that the LC50 for rigid foam is about the same as wool but slightly higher than wood or cotton by a factor of two to three, well within the variance cited by the NIST study, further confirmation that all these variations are not statistically significant (Ruokojarvi et al. and Kimmerle and Prager). For instance, Prager et al (1994) report that the LC50 for Douglas fir with a density of 31 pcf is 28 gm/m3 and that of a rigid foam with a density of 2.5 pcf is 7 gm/m3 when measured at equal mass, but respective values become 54 cm3/m3 for the wood sample and 165 cm3/m3 for the foam sample when measured at equal volumes (because the foam insulation has lower density than the wood). So the acute toxicity of smoke from rigid foam is not toxicologically different from that of natural products used in buildings and furnishings.

With regard to potential chronic exposure to volatile organic compounds (VOC's) generated at municipal fires, Austin et al. (2001) reported analyses of air and smoke samples collected in special stainless steel canisters from inside burning buildings at nine municipal fires by firefighters. The samples were taken at times during which the firefighters thought that some coworkers might remove their SCBA masks. There were seven mixed occupancy fires, one electronics industry fire, and one structural fire that had smoldered for nine days. Fourteen substances accounted for 77% of the 123 VOCs found in the samples. Benzene (0.12-10.76 ppm), toluene (0.05-5.52 ppm), 1,3-butadiene (0.03-4.84 ppm), naphthalene (.01-2.14 ppm), and styrene (.003-2.01 ppm) accounted for 31% of the total VOCs from the fires. Benzene and 1,3 butadiene are known human carcinogens (Group 1) with OSHA established 15 minute STEL values of 5 ppm while toluene, naphthalene, and styrene are possible human carcinogens (Group 2B) with respective OSHA 8 hour TWA values of 200 ppm, 10 ppm, and 100 ppm. These same five compounds were also the predominant components of experimental fires analyzed by Austin and coworkers where spruce wood, mattresses, sofa foam, plywood, cardboard, and white foam insulation were

burned. So most modern plastics generally produce the same types and levels of carcinogenic VOCs as does wood in fires.

28. Does the use of halogenated flame retardants in foam plastics result in smoke that is more toxic being produced in building fires?

[Question 28 is new question stemming from several parts of the 16 of July 24 report. Answer is new.]

Data has already been presented regarding the extremely minor contributions to carcinogen concentration in smoke and soot that polyhalogenated dioxins and furans may make relative to the extremely large contributions from PAH. Also, evidence has been cited that the smoke toxicity of foam plastic insulation is comparable to that of natural products as is the level of carcinogenic VOCs. Toxicologists use a toxicity classification scale for inhalation that places LC50 values of 10 to 100 in the highly toxic category and values of 10 or less in the extremely toxic category. Since smoke toxicity studies have demonstrated that the smoke potency values must differ by more than a factor of 3 to be considered statistically significantly different, one would have to find literature values where the smoke LC50 value for an FR foam would have to have an extremely low value (outside the typical scale, see Figure in Appendix H) to move to the next higher hazard class.

29. How do the effects of fires affect firefighters in particular?

[Question 29 is new question stemming from several parts of the 16 of July 24 report. Answer is new.]

Available data indicate that firefighters should have special concerns because the rates of many chronic diseases, including cancers, are higher among firefighters than among the general population. However, there is little, if any, evidence that this is associated with the flame retardants used in foam plastic insulation materials.

30. Is it safe to use thermal barriers covering non flame retarded insulation materials in lieu of the combination of thermal barriers and insulation materials containing flame retardants?

[Question 30 is new question stemming from several parts of the 16 of July 24 report. Answer is new.]

There is no information available on this because all thermal barriers have been approved (or listed or labeled) based on testing in conjunction with a commercial foam plastic insulation material and all commercial foam plastic insulation materials that are used in the US and need a thermal barrier contain flame retardants, as they are required to comply with the appropriate specification and/or certification. In order to know the answer to this question fire testing would have to be done.

[New] Results of Working Group Discussions

The working group agreed that proposals and recommendations made to the California State Fire Marshal should be assessed experimentally through fire testing (both reaction-to-fire and fire resistance) to ensure the maintenance of adequate fire safety in accordance with the language of CA AB 127.

Testing should compare the fire performance of proposed assemblies using non-flame retardant foam plastic insulation with the fire performance of typical assemblies permitted by current building code (including compliant flame retardant insulation). At present, no U.S. manufacturer provides commercial materials that do not comply with ASTM E84 flammability requirements. But in order to conduct the proposed testing, such foam plastic insulation materials without added flame retardants must be procured. These materials shall comply with all requirements imposed by the State of California except for flammability requirements. Suggestions for procuring such foam plastic insulation materials include: purchasing them in a foreign country (e.g. Sweden); or commissioning a manufacturer to produce them for the California Office of the State Fire Marshal.

The workgroup recommends that testing should involve both the ASTM E119 (modified) (or UL 263) fire resistance test and the NFPA 286 room-corner test for each type of assembly described below. Tests should be run for the standard code-compliant assembly with conventional flame retarded insulation (as described in Appendix ??). The tests should then be conducted for the new, proposed assembly containing non-flame retarded foam plastic insulation. A comparison of the two different assemblies should be made based on the criteria contained in the standard test methods. Some members of the Working Group suggested that the NFPA 286 test should be conducted to failure based on the interior finish code criteria (CBC/CRC), rather than terminated at 15 minutes as called for in the standard. However, a means of interpreting such results has not yet been determined. It is not known how different code-compliant flame retarded insulations would perform in the NFPA 286 test run to failure; therefore a comparison with the performance of the non-flame retarded insulation materials will be difficult, and such a comparison may not be appropriate or meaningful. Under the current building code, the fire test is terminated after 15 minutes and no additional testing is required.

Comment [PHW22]: Agreed – this needs work.

DRAFT

For all assemblies there will be a need for baseline heat release data to determine the maximum heat release rate for non-flame retarded insulation. There is a need for data, particularly based on NFPA 286.

Comment [PHW23]: This is an area where the WG needs further discussion; HRR may not be an acceptable criteria

Non-FR foam plastic insulation materials would need to be identified in such a way that they are not confused with traditional materials at the work site. We can look to current methods used to identify materials that have a range of fire-resistance properties but essentially look similar, such as gypsum board, glass, and foam plastic insulation. We can also look at labeling methods used in Europe for non FR foam insulation.

Comment [PHW24]: This presumes that non-FR spray foams are marketed in the EU. Not sure that is the case. Most of the focus was on EPS/XPS because of the HFR used in those products.

Listing and/or labeling for nonFR foam would need to exempt particular standards for materials fire testing. These standards may include: ASTM E84, ASTM D2863, C578, C1029, C1289, C591. Nationally recognized testing labs should be consulted for the best method of listing exemptions.

Comment [AL25]: It might be useful for the report to clearly state the applicable standards in an Appendix.

DRAFT

Proposed Assemblies for Fire Testing

The Flammability Standards for Building Insulation Materials Working Group drafted several assemblies where fire safety is expected to be maintained using non-flame retarded foam insulation. Fire testing should compare the fire performance of the proposed assemblies with the fire performance of existing assemblies permitted by code. The design parameters assumed for each of the proposed assemblies was type V construction.

Swedish building codes provide precedence for this method of prescriptive fire safety...

Comment [AL26]: Need to flesh out

Wall Construction Proposal - assembly to be composed of:

- One layer of 5/8 type X Gypsum (wallboard/sheathing) on both sides of the wall, with joints of exterior on framing or blocking;
- 2x4 (16 in on center), 2x6 (24 in on center) wood stud wall construction, including staggered stud wall construction.
    - Most Simpson Strong-Walls provide (or are compatible with) wood framing at this size/interval
- Solid fill of stud wall cavity with non FR insulation. (Need to specify what or which insulation - Look at UL for data)
- Maximum 1" air space. (CEC Part 6 requires any air gap to be on the non-conditioned side except for spray foam applications). [test to be run with 1" air space and without airspace]

Comment [MS27]: It would be useful to call Simpson and ask about rated wall assemblies. Are wood or metal Strong-Walls generally considered to contribute to the fire resistance of the wall? This info is not readily available on their website.

- Fire-stopping in accordance with ASTM E814 for all penetrations, notched, bored holes, for drain, waste and vent piping, other plumbing, electrical, mechanical ducting and fire sprinklers. This is required in addition to the fireblocking typically required in concealed spaces in wood frame construction.
- Electrical installations using nonmetallic rated boxes (membrane penetration CBC 714.3.2), wall to be tested with one recpt outlet and switch outlet
- Load bearing wall to be tested.

Comment [KR28]: Need to be more specific, type location.

Standard wall assembly for testing purpose:

- ½" Gypsum interior side
- 3/8" OSB exterior sheathing or 7/16 structural sheathing
- 2x4 (16 in on center), 2x6 (24 in on center) wood stud wall construction, including staggered stud wall construction.
- Solid fill of stud wall cavity with FR insulation. (Need to specify what/which insulation - Look at UL for data).
- Electrical installations using boxes, wall to be tested with one recpt outlet and switch outlet
- Load bearing wall to be tested.
-

DRAFT

Floor/Ceiling Construction Proposal- assembly to be composed of:

- 3/4 plywood (floor side) with leveling compound- Check with UL
- 2x10 wood joists
- Two layers of 5/8" type X Gypsum (wallboard/sheathing) ceiling side
- Solid fill of stud floor/ceiling cavity with non FR insulation.
- Maximum 1" air space. [Test to be run with no airspace and 1" airspace]-
    - Further research to see if both test are needed
    - Further research to see if 1" is the correct size. ½" or 1.5" or 3" more appropriate?
    - Potential for larger gap may exist, as compared to wall assembly
- Fire-stopping ASTM E814 for all penetrations including penetrations of thermal barriers, notched, bored holes, DWV other plumbing, electrical, mechanical ducting, fire sprinklers.
- Rigid sheet metal ducting is required.
- Electrical installations, including lighting – rated boxes
- Exceptions for thermal barriers at the floor surface (R316.5.13/2603.4.1.14) would need to be revised to reference the more stringent flooring requirement for non-FR foam assemblies.

Comment [MS29]: This thermal barrier exception is needed for this assembly, otherwise a thermal barrier is required at the floor surface (we have proposed plywood).

Standard Floor/Ceiling for testing purpose:

- ½" plywood (floor side)
- 2x10 wood joists
- One layer of ½" Gypsum (wallboard/sheathing) ceiling side
- Solid fill of stud floor/ceiling cavity with FR insulation.
- Maximum 1" air space (see comments on air space above)

Crawlspace Construction Proposal- assembly to be composed of:

- 3/4 plywood (floor side)
- 2 x 10 floor joists
- 3/4 plywood (crawlspace side) - need more data or use floor/ceiling assembly above
- Exceptions for thermal barriers at the crawl space (R316.5.4/2603.4.1.6) would need to be revised to reference the more stringent crawl space requirement for non-FR foam assemblies. (need further discussion/information).
- Exceptions for thermal barriers at the floor surface (R316.5.13/2603.4.1.14) would need to be revised to reference the more stringent flooring requirement for non-FR foam assemblies.
- Solid fill of stud floor/ceiling cavity with non FR insulation.
- Maximum 1" air space. [Test to be run with no airspace and 1" airspace]-
    - Further research to see if both test are needed
    - Further research to see if 1" is the correct size. ½" or 1.5" or 3" more appropriate?
    - Potential for larger gap may exist, as compared to wall assembly
- Fire-stopping ASTM E814 for all penetrations including penetrations of thermal barriers, notched, bored holes, DWV other plumbing, electrical, mechanical ducting, fire sprinklers.
- Electrical installations rated boxes

Comment [MS30]: This thermal barrier exception is needed for this assembly, otherwise a thermal barrier is required at the floor surface (we have proposed plywood).

Comment [MS31]: This thermal barrier exception is needed for this assembly, otherwise a thermal barrier is required at the floor surface (we have proposed plywood).

Standard Crawl Space for testing purpose:

- ½" plywood (floor side)
- 2x10 wood joists
- ¼" plywood (crawlspace side)
- Solid fill of stud floor/ceiling cavity with FR insulation.
- Maximum 1" air space (see comments on air space above)

Attic Construction Proposal- assembly to be composed of:

- 3/4 plywood (exterior side)

DRAFT

- Roof rafter or truss (top chord)
- Two layer of 5/8 type X Gypsum (wallboard/sheathing) (attic side) is this enough?
- Solid fill of cavity with non FR insulation.
- Maximum 1" air space. [Test to be run with no airspace and 1" airspace]-
    - Further research to see if both test are needed
    - Further research to see if 1" is the correct size. ½" or 1.5" or 3" more appropriate?
    - Potential for larger gap may exist, as compared to wall assembly
- Insulation must be enclosed in above mentioned assembly.
- Fire-stopping ASTM E814 for all penetrations, notched, bored holes, DWV other plumbing, electrical, mechanical ducting, fire sprinklers.
- Exceptions for thermal barriers (R316.5.3/2603.4.1.6) shall not be accepted.
- Electrical installations rated boxes

Standard Attic for testing purpose:

- ½" plywood (exterior side)
- Roof rafter or truss (top chord)
- ¼" plywood (attic side)
- Solid fill of cavity with FR insulation
- Maximum 1" air space.

DRAFT

Underfloor Construction Proposal- - assembly to be composed of:

Proposed language was submitted based on the California Building Code as follows (revised code text is underlined):
CBC
2603.3 Surface-burning characteristics.
Unless otherwise indicated in this section, foam plastic insulation and foam plastic cores of manufactured assemblies shall have a flame spread index of not more than 75 and a smoke-developed index of not more than 450 where tested in the maximum thickness intended for use in accordance with ASTM E 84 or UL 723. Loose fill-type foam plastic insulation shall be tested as board stock for the flame spread and smoke-developed indexes.
Exceptions:

1. Smoke-developed index for interior trim as provided for in Section 2604.2.
2. In cold storage buildings, ice plants, food plants, food processing rooms and similar areas, foam plastic insulation where tested in a thickness of 4 inches (102 mm) shall be permitted in a thickness up to 10 inches (254 mm) where the building is equipped throughout with

an automatic fire sprinkler system in accordance with Section 903.3.1.1. The approved automatic sprinkler system shall be provided in both the room and that part of the building in which the room is located.

3. Foam plastic insulation that is a part of a Class A, B or C roof-covering assembly provided the assembly with the foam plastic insulation satisfactorily passes FM 4450 or UL 1256. The smoke-developed index shall not be limited for roof applications.
4. Foam plastic insulation greater than 4 inches (102 mm) in thickness shall have a maximum flame spread index of 75 and a smoke-developed index of 450 where tested at a minimum thickness of 4 inches (102 mm), provided the end use is approved in accordance with Section 2603.10 using the thickness and density intended for use.
5. Flame spread and smoke-developed indexes for foam plastic interior signs in covered and open mall buildings provided the signs comply with Section 402.6.4
6. Flame spread index and smoke-developed index shall not be required for sub-grade foam plastic insulation located in any of the following conditions:
   1. Exterior insulation that extends a maximum of 12" above grade and is separated from the interior by a minimum 4-inch thickness of masonry or concrete. Insulation located less than 6 inches below finish grade shall be covered with an exterior material that protects against ignition: 1/2-inch-thick cement board or other non combustible materials installed in such a manner that the foam plastic insulation is not exposed.
   2. Insulation located between a concrete stem wall and a concrete slab, each of minimum 4-inch thickness. The insulation edge shall separated from the interior by a 15 -minute thermal barrier, ½" thickness mortar, ½" thickness concrete, or nominal 2" wood.
   3. Insulation located a minimum of 6 inches below finish grade.
   4. Insulation protected from exposure by a minimum 4-inch thickness of concrete or masonry.

Unrestricted insulation shall be separated from combustible concealed spaces by fireblocking materials as listed in 718.2.1.

DRAFT

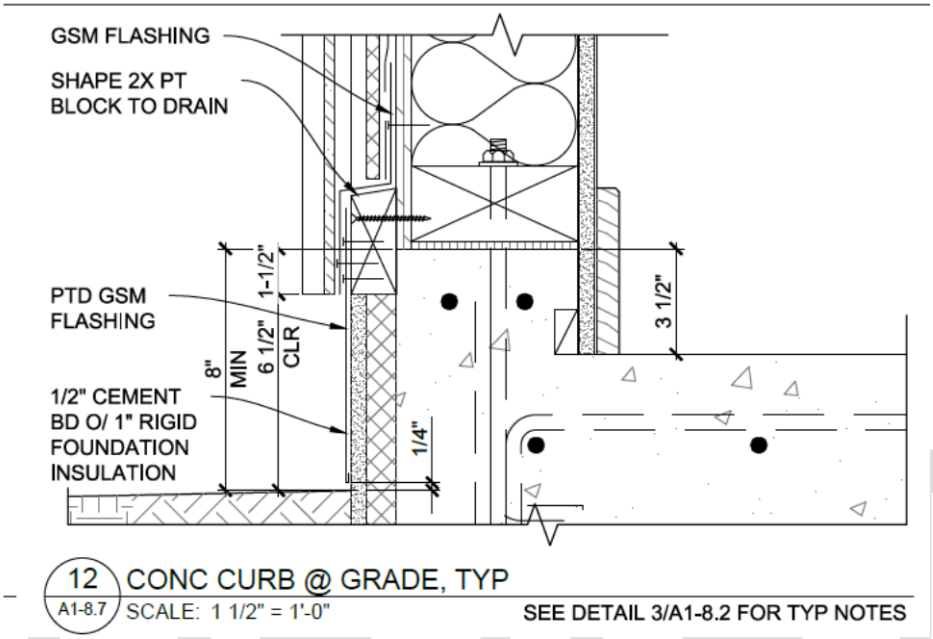

Schematic Section Detail for proposed CBC 2603.3 Exception 6.1

DRAFT

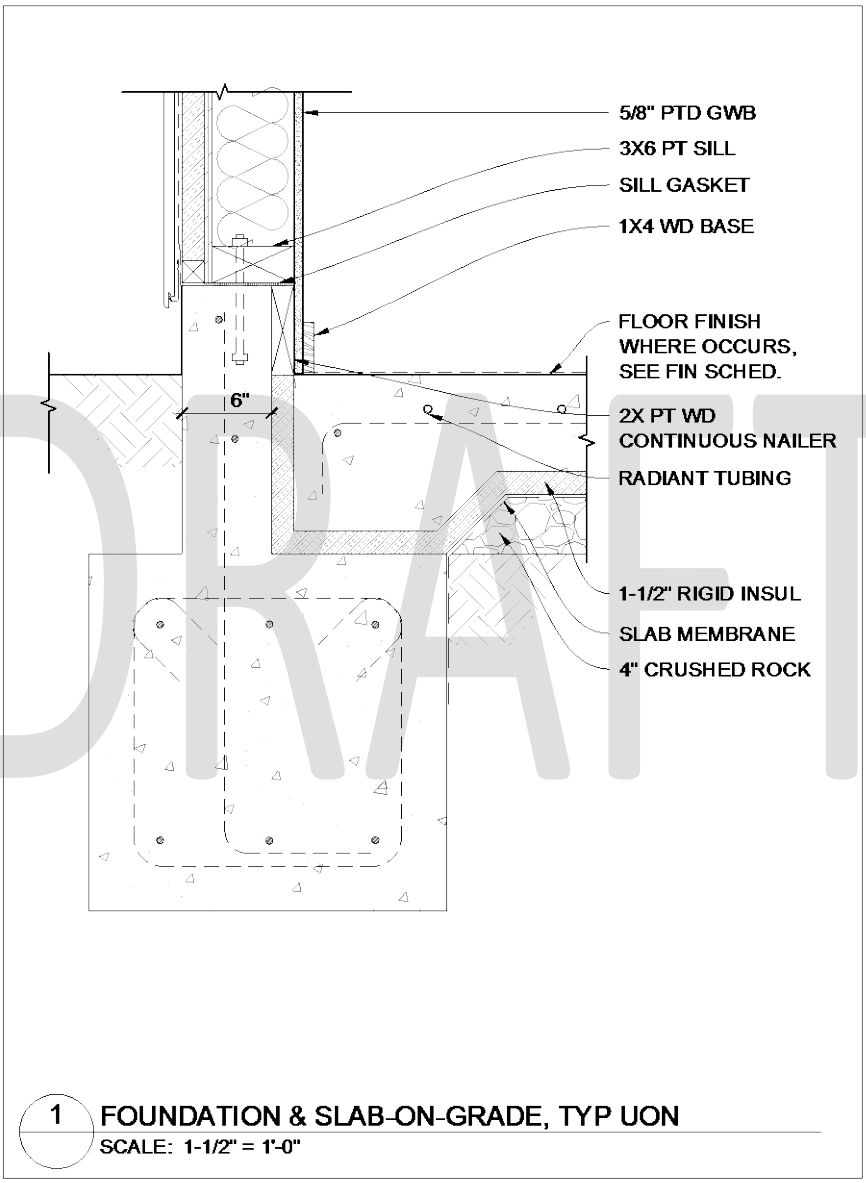

DRAFT

Schematic Section Detail for proposed CBC 2603.3 Exception 6.2

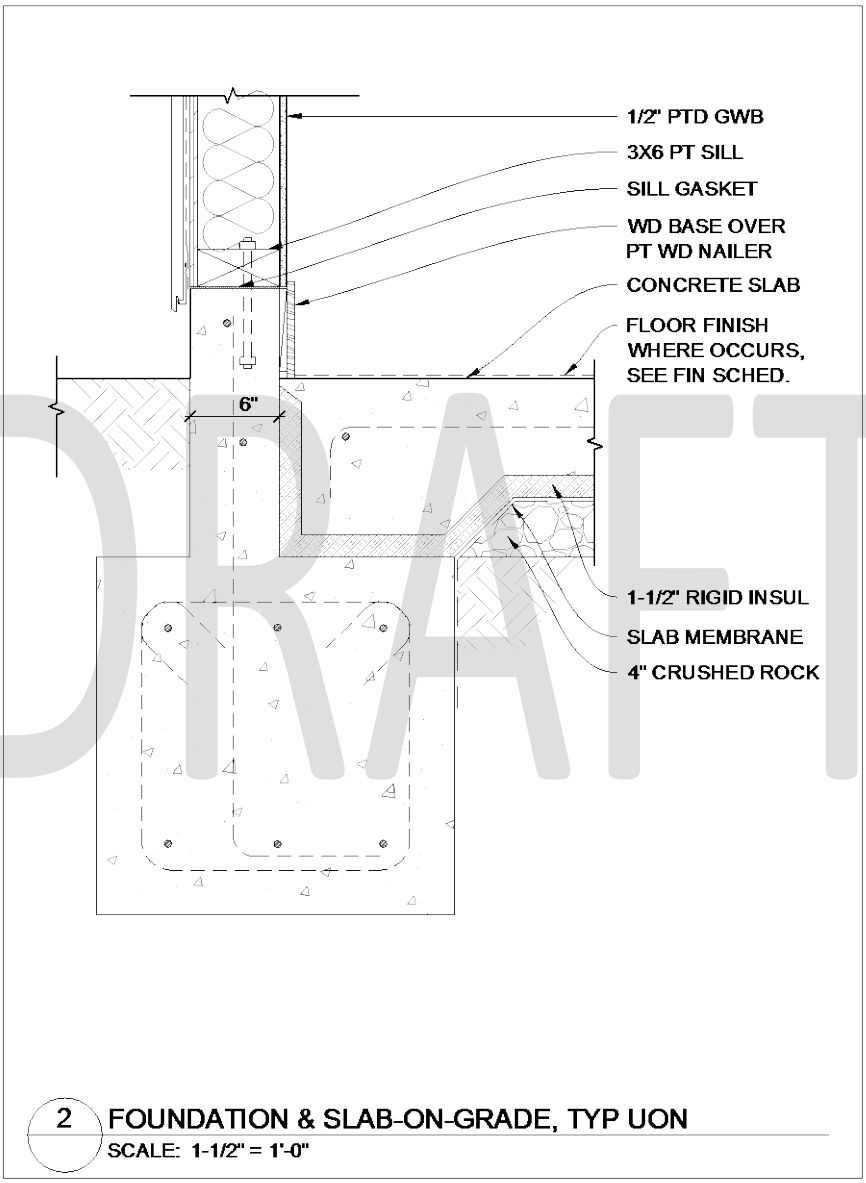

Schematic Section Detail for proposed CBC 2603.3 Exception 6.2

Conclusion

[Need to write Conclusion section. Strikeout section is from Sprinkler report]

~~This report represents the culmination of many hours of in-depth research and analysis from the SFM **Residential Fire Sprinkler/Water Supply Task Force**. Various disciplines related to water supply and how it relates to residential fire sprinklers developed the recommendations outlined in the previous sections of this report. The Task Force took into consideration the many different residential fire sprinkler water supply factors and tried throughout to address the complex and diverse issues that arose in preparation for a statewide residential fire sprinkler requirement for new construction scheduled for implementation January 1, 2011.~~

~~Additionally, as California moves forward to the implementation phase of the future residential fire sprinkler requirement it will be critically important to share the information gathered by this task force with all stakeholders throughout the state. It is recommended that key stakeholders continue to partner beyond this task force process and conduct training and outreach on the issues throughout California. See **Appendix D** for a **proposed** training and outreach plan.~~

DRAFT

Appendix A

Assembly Bill 127 (Skinner, 2013) and additional Legislative Intent from the Assembly Journal

[INSERT TEXT OF THE BILL AND THE LEG COUNSEL'S DIGEST HERE]

Assembly Bill No. 127
CHAPTER 579

An act to add Section 13108.1 to the Health and Safety Code, relating to fire safety.

[Approved by Governor October 05, 2013. Filed with Secretary of State October 05, 2013.]

LEGISLATIVE COUNSEL'S DIGEST

AB 127, Skinner. Fire safety: fire retardants: building insulation.

Existing law authorizes the State Energy Resources Conservation and Development Commission to adopt regulations pertaining to urea formaldehyde foam insulation materials that are reasonably necessary to protect the public health and safety. Existing law provides that these regulations may include prohibition of the manufacture, sale, or installation of this insulation. Existing law also authorizes the Bureau of Electronic and Appliance Repair, Home Furnishings, and Thermal Insulation to establish by regulation insulation material standards governing the quality of all insulation material sold or installed in the state.

The California Building Standards Law requires all state agencies that adopt or propose adoption of any building standard to submit the building standard to the California Building Standards Commission for approval or adoption. Existing law requires the commission to receive proposed building standards from state agencies for consideration in an 18-month code adoption cycle. Existing law requires the commission to adopt, approve, codify, update, and publish green building standards applicable to a particular occupancy, if no state agency has the authority or expertise to propose green building standards for those occupancies.

This bill would require the State Fire Marshal, in consultation with the Bureau of Electronic and Appliance Repair, Home Furnishings, and Thermal Insulation, to review the flammability standards for building insulation materials, including whether the flammability standards for some insulation materials can only be met

with the addition of chemical flame retardants. The bill would require, if deemed appropriate by the State Fire Marshal based on this review, the State Fire Marshal to, by July 1, 2015, propose for consideration by the commission updated insulation flammability standards that accomplish certain things, including maintaining overall building fire safety.

Bill Text
The people of the State of California do enact as follows:

SECTION 1.
The Legislature finds and declares that for some insulation materials, current insulation flammability standards can only be met using chemical flame retardants and that new standards proposed pursuant to this act may provide manufacturers with flexibility in meeting the flammability standards, with or without the addition of chemical flame retardants, and would be consistent with maintaining overall building fire safety.

SEC. 2.
Section 13108.1 is added to the Health and Safety Code, to read:

13108.1.
The State Fire Marshal, in consultation with the Bureau of Electronic and Appliance Repair, Home Furnishings, and Thermal Insulation, shall review the flammability standards for building insulation materials, including whether the flammability standards for some insulation materials can only be met with the addition of chemical flame retardants. Based on this review, and if the State Fire Marshal deems it appropriate, he or she shall, by July 1, 2015, propose for consideration by the California Building Standards Commission, to be adopted at the sole discretion of the commission, updated insulation flammability standards that accomplish both of the following:

(a) Maintain overall building fire safety.

(b) Ensure that there is adequate protection from fires that travel between walls and into confined areas, including crawl spaces and attics, for occupants of the building and any firefighters who may be in the building during a fire.

Sept. 12, 2013 ASSEMBLY JOURNAL 3269
CALIFORNIA LEGISLATURE
2013–14 REGULAR SESSION

DRAFT

Legislative Intent—Assembly Bill No. 127

E. Dotson Wilson
Chief Clerk of the Assembly State Capitol,
Room 3196 Sacramento, California

Dear Mr. Wilson: Assembly Bill 127 requires the State Fire Marshal to review the flammability standards for building insulation materials and to propose new flammability standards. The phrase "review the flammability standards" should not imply that the State Fire Marshal must generate new data or research. Rather, my intent in drafting the bill is for the State Fire Marshal to rely on existing information related to building materials.

Sincerely,
NANCY SKINNER, Assembly Member Fifteenth District

DRAFT

DRAFT

Appendix B2

Other Referenced Documents

[Include references (and summaries where applicable) here]

DRAFT

Appendix C

Fire Test Standards for Insulation Materials

- NFPA 286: Standard Methods of Fire Tests for Evaluating Contribution of Wall and Ceiling Interior Finish to Room Fire Growth
- ASTM E84 (or UL 723): Standard Methods of Fire Tests for Evaluating Contribution of Wall and Ceiling Interior Finish to Room Fire Growth
- ASTM E108 (or UL 790): Standard Test Methods for Fire Tests of Roof Coverings
- ASTM E119 (or UL 263): Standard Test Methods for Fire Tests of Building Construction and Materials
- NFPA 268: Standard Test Method for Determining Ignitability of Exterior Wall Assemblies Using a Radiant Heat Energy Source
- NFPA 259: Standard Test Method for Potential Heat of Building Materials
- NFPA 285: Standard Fire Test Method for Evaluation of Fire Propagation Characteristics of Exterior Non-Load-Bearing Wall Assemblies Containing Combustible Components

Comment [AL32]: Flesh out for the relevant test standards

DRAFT

Appendix D

Building Code Requirements for Foam Plastic Insulation

Comment [AL33]: Flesh out – perhaps all that is needed is to include Lorraine's updated table from one of the early WG meetings

February 19, 2014

California Fire Tests for Insulation: 2013 California Building Code (CBC)

2013 CBC: Chapter 7, Section 720 Thermal and Sound-Insulating Materials

Products	Insulating materials, fiberglass, mineral wool, cellulose, including facings and all layers of single and multilayer reflective foil insulation (except Foam insulation shall comply with Chapter 26, and Single and Multilayer reflective plastic core insulation shall comply with Section 2613)
Uses	Wall, roof, ceiling, attic, crawl spaces
Fire test requirements -applicability	Nationwide applicability: California Codes are based on the ICC model codes: International Building Code (IBC), International Residential Code (IRC)
Concealed installation	Except cellulose, Flame spread index and smoke developed index (720.2) Flame Spread Index <25/Smoke-developed Index <450 • ASTM E84 -09 Test Method for Surface Burning Characteristics of Building Materials, or • UL723 -08 Standard for Test for Surface Burning Characteristics of Building Materials – Facings are exempt from the flame spread and smoke developed index if they are in contact with the unexposed surface of the ceiling, wall, or floor finish. Cellulose – no limit on flame spread but must comply with <450 smoke-developed index AND (720.6) • CPSC 16 CFR Part 1209 (??? edition) Interim Safety Standard for Cellulose Insulation, AND • CPSC 16 CFR Part 1404 (??? edition) Cellulose Insulation
Exposed installation	Flame spread index and smoke developed index (720.3) Flame Spread Index <25/Smoke-developed Index <450 • ASTM E84 -09 Test Method for Surface Burning Characteristics of Building Materials, or • UL723 -08 Standard for Test for Surface Burning Characteristics of Building Materials –

DRAFT

	(Except cellulose that is not spray applied, only the smoke developed index of <450 applies.) On Attic floors (720.3.1): • ASTM E970 – 08A Test Method for Critical Radiant Flux of Exposed Attic Floor Insulation Using a Radiant Heat Energy Source
Loose fill insulation	For materials that cannot be mounted in the E84 apparatus, Flame spread index and smoke developed index (720.4) Flame Spread Index <25/Smoke-developed Index <450 • CAN/ULC S102.2 - 1988 Standard Method of Test for Surface Burning Characteristics of Flooring, Floor Coverings and Miscellaneous Materials and Assemblies – with 2000 Revisions Except cellulose, which complies with the details in concealed or exposed applications AND the CPSC requirements in Section 720.6.

Chapter 26 Plastics, Section 2603 Foam Plastic Insulation
Applies to all types of foam insulation: Extruded Polystyrene (XPS), Expanded Polystyrene (EPS), Rigid Polyurethane (PUR), Polyisocyanurate (PIR), Spray Polyurethane Foam (SPF)

Products	XPS, EPS, PU, PIR, SPF
Uses	Walls, roofs, crawl spaces, attics, below grade, exposed commercial interiors, coolers, freezers, entry doors, garage doors, metal panels, Exterior Insulation Finish Systems (EIFS), metal panels
Fire test requirements -applicability	Nationwide applicability: California Codes are based on the ICC model codes: International Building Code (IBC), International Residential Code (IRC)
Basic fire test	Flame spread index and smoke developed index (2603.3) Flame Spread Index <75/Smoke-developed Index <450 • ASTM E84 -07 Test Method for Surface Burning Characteristics of Building Materials, or • UL723 -03 Standard for Test for Surface Burning Characteristics of Building Materials – with Revisions through May 2005 ASTM E84 or UL 723 is also used as quality control for the labeling requirements in Section 2603.2 of the 2013 CBC ASTM E84 or UL 723 is also referenced in 2603.4.1.13 Walk in coolers, and 2603.5.4 Foam used on exterior walls in Type I, II, III, IV construction of any height – here the foam Flame spread index is limited to 25 or less and smoke –developed index is

DRAFT

	<450)
In addition to ASTM E84, additional fire tests or prescriptive installation details are required for specific uses of foam insulation:	Foam roof insulation – Exterior flame spread (2603.6): • ASTM E108 – 07a – Test Methods for Fire Tests of Roof Coverings or • UL790 – 04 Standard Test Methods for Fire Tests of Roof Coverings –with revisions through October 2008 Foam roof insulation – Interior (under steel deck) flame spread – fuel contribution (2603.3 – Exception3, 2603.4.1.5): • ANSI/FM 4450 (1989) Approval Standard for Class 1 Insulated Steel Deck Roofs – with Supplements through July of 1992 or • UL 1256 – 02 Fire Test of Roof Deck Construction – with Revisions through January 2007 Wall, roof/ceiling, floor/ceiling assemblies containing foam insulation – hourly fire resistance ratings (2603.5.1 if required for Exterior walls of Type I, II, III, IV of any height) • ASTM E119 -08a – Test Methods for Fire Tests of Building Construction and Materials or • UL263 – 03 Standard for Fire Test of Building Construction and Materials - with Revisions through October 2007 Garage Doors with foam insulation (2603.4.1.9) • DASMA 107 – 1997 (R2004) Room Fire Test for Garage Doors Using Foam Plastic Insulation (garage doors) Siding backer board (2603.4.1.10) Potential Heat • NFPA 259 – 13 Test Method for Potential Heat of Building Materials One Story Exterior Walls: Flame Spread Index <25; Smoke-developed Index <450 (2603.4.1.4) and Exterior walls of Type I, II, III, IV of any height: Flame Spread Index <25; Smoke-developed Index <450 (2603.5.4); • ASTM E84 -07 Test Method for Surface Burning Characteristics of Building Materials, or • UL723 -03 Standard for Test for Surface Burning Characteristics of Building Materials – with Revisions through May 2005 Exterior walls Type I, II, III, IV over 1 story - Potential Heat (2603.5.3) • NFPA 259 – 13 Test Method for Potential Heat of Building Materials Exterior Walls Type I, II, III, IV of any height - Ignitability (2603.5.7) • NFPA 268 – 12 – Standard Test Method for Determining Ignitability of

DRAFT

	Exterior Wall Assemblies Using A Radiant Heat Source Exterior Walls Type I, II, III IV of any height - Vertical and lateral flame propagation – (2603.5.5) • NFPA 285 – 11 Standard Method of Test for the Evaluation of the Flammability Characteristics of Exterior Nonload-bearing Wall Assemblies Containing Combustible Components Special approvals (2603.10), test must reflect actual end use configuration; typically used to qualify exposed interior wall/ceiling finish, elimination of ignition barriers for attics, crawl spaces, etc. • NFPA 286 – 11 Standard Method of Test for Evaluating Contribution of Wall and Ceiling Interior Finish to Room Fire Growth (includes specific acceptance criteria) • ANSI/FM4880 – 05 American National Standard for Evaluating Insulated Wall or Wall and Roof/Ceiling Assemblies, Plastic Interior Finish Materials, Plastic Exterior Building Panels, Wall/Ceiling Coating Systems, Interior and Exterior Finish Systems (exposed foam in interior walls, also various assemblies as described, elimination of the thermal barrier), or • UL 1040 - 96 Fire Test of Insulated Wall Construction – with Revisions through September 2007 (2603.4, 2603.9 – exposed foam in interior walls, elimination of the thermal barrier), or • UL 1715-97 – Fire Test of Interior Finish Material – with Revisions through April 2008 (2603.4, 2603.9, exposed foam on interior walls)

Chapter 26 Plastics, Section 2613 Reflective Plastic Core Insulation

Products	Reflective Plastic Core Insulation
Uses	Walls, roofs, crawl spaces, attics, exposed commercial interiors, coolers, freezers
Fire test requirements -applicability	Nationwide applicability: California Codes are based on the ICC model codes: International Building Code (IBC), International Residential Code (IRC)
Basic fire test	Flame spread index and smoke developed index (2613.3) Flame Spread Index <25/Smoke-developed Index <450 • ASTM E84 -09 Test Method for Surface Burning Characteristics of Building Materials, or • UL723 -03 Standard for Test for Surface Burning Characteristics of Building Materials – with Revisions through May 2005
In addition to ASTM E84, if	• NFPA 286 – 11 Standard Method of Test for Evaluating Contribution of Wall and Ceiling Interior Finish to Room Fire Growth (includes specific

DRAFT

exposed	acceptance criteria in 803.1.2.1) • UL 1715-97 – Fire Test of Interior Finish Material – with Revisions through March 2004 (2603.4, 2603.9, exposed foam on interior walls)

[SHOULD INCLUDE THERMAL BARRIER REQUIREMENTS]

DRAFT

Appendix E

SFM's Directions to the Working Group (personal address, INSERT DATE HERE)

[Copy text from the WG minutes here]

Comment [AL34]: Needs to be filled in

State Fire Marshal Chief Tonya Hoover thanked all of the members for participating in the AB 127 Working Group, acknowledged the fact that it's an extremely time-consuming process and expressed her appreciation to the members for remaining on board because the topic is very important. Chief Hoover then assured the workgroup members that the letters that were written to SFM were all thoroughly read and discussed; she takes every comment and concern very seriously and wants to ensure that the process remains open and balanced. SFM is not giving any one entity or industry a special voice or consideration above or beyond any other entity or industry; this is an equal playing field. If there are twelve fire service personnel in the room, then they do not have twelve times the voice. Chief Hoover clarified that SFM's primary interest is in fire and panic safety; she wants to ensure that the necessary public safety requirements can be met. Any blog or publication that insinuates that SFM can be bought or funded in a manner that's contrary to the mission is false and Chief Hoover takes such statements personally. Chief Hoover hopes that all parties participating in this group will speak up about any topic that he/she thinks needs to be addressed, disclose their affiliation(s) and be a part of the discussions and information sharing process. She does not want anyone to sit in silence and then throw stones at each other for what the workgroup is trying to accomplish nor does she want the workgroup's efforts to be misinterpreted or misrepresented.

Chief Hoover stated that everybody can recognize that E84 is not the best test for all construction circumstances; construction techniques and products and fixed protection have evolved over the life of the code development. There could very well be other construction alternatives that provide the necessary level of fire safety without using E84 to determine if fire safety provisions will be met. Chief Hoover requested that the workgroup develop the recommended alternatives to achieve the needed fire safety which could include construction methods that build assemblies with barriers, fixed protection systems and/or the limited introduction of items in areas such as walls, floors and ceilings and ceiling openings to limit the introduction of air, fire and smoke into those spaces. Chief Hoover is looking for alternatives to E84; it does not have to be used/mandated- what are the alternatives? There may be a need to perform some assembly testing to draw some conclusions that could be recognized in the code as alternatives. California has the ability to create alternatives; the workgroup is comprised of scientists and

PhD's who are the subject matter experts and know best. There could be a proposal to develop a more appropriate test; it's Chief Hoover's hope that the workgroup will include such a proposal in the recommendation report.

Chief Hoover received a letter from the bill's author that provides a complete explanation of her intent with a narrowed scope of direction and supports alternatives to E84 for the code. Also, SFM is trying to obtain funding for this project through the governor's budget process but will not know if it's approved until 7/1/14. Chief Hoover hopes that the request for funding will be included in the 2014-15 budget. Chief Hoover believes that SFM can stay focused on the mission of maintaining fire and panic safety while addressing possible acceptable alternatives for a modern construction world.

DRAFT

Appendix F
Abbreviations and Definitions

AB127: California State Assembly Bill No. 127 (Chapter 579, Statutes of 2013) An act to add Section 13108.1 to the Health and Safety Code, relating to fire safety.
Assembly Test:
AC: ICC Evaluation Services Acceptance Criteria
ASTM: ASTM International
BAP: Benzo[a]pyrene
CBC: California Building Code
CFC: California Fire Code
CO: Carbon monoxide
COHb: Carboxyhemoglobin
CPSC: Consumer Product Safety Commission
CRC: California Residential Code
DIN: Deutsches Institut für Normung (German Standards Organization)
EIFS: Exterior Insulation and Finish Systems
EPS: Expanded polystyrene foam
EWIS: External Wall Insulation Systems
Finish Rating:
HBCD: Hexabromocyclododecane
IARC: International Agency for Research on Cancer
IBC: International Building Code
ICC: International Code Council
ICC ES: ICC Evaluation Services
IEBC: International Existing Building Code
IFC: International Fire Code
IRC: International Residential Code
ISO: International Organization for Standardization
LC50: Concentration lethal to 50% of exposed subjects
LOI: Limiting oxygen index
Material Test:
NBS: National Bureau of Standards (now NIST)
NFPA: National Fire Protection Association
NIST: National Institute of Standards and Technology
OSHA: Occupational Safety and Health Administration
PAH: Polynuclear aromatic hydrocarbons or polycyclic aromatic hydrocarbons
PBDD/F: Polybrominated dioxins and furans
PCDD/F: Polychlorinated dioxins and furans
PIR: Polyisocyanurate foam

DRAFT

PolyFR:
Polyiso: Polyisocyanurate
PUR: Polyurethane
SCBA: Self-contained breathing apparatus
SIPs: Structural Insulated (or Insulating) Panels
SPF: Spray polyurethane foam
SPFA: Spray Polyurethane Foam Alliance
TCPP: Tris (1-chloro-2-propyl) phosphate (TCPP)
Thermal Barrier:
UL: Underwriters Laboratories
VOCs: Volatile organic compounds
XPS: Extruded polystyrene foam

DRAFT

Appendix G
Jesse Beitel's presentation to the WG

DRAFT

Appendix H

Letter to OSFM from Assembly member Nancy Skinner?
Letter to OSFM from Senator Cathleen Galgiani?

DRAFT

Appendix I:

Types of building insulation?

DRAFT

Appendix J:

DRAFT