Flammability Standards for Building Insulation Materials

Working Group Report and Recommendations

CAL FIRE – Office of the State Fire Marshal

Draft November 20, 2014

Message from the State Fire Marshal

[Text to be added by Chief Hoover]

DRAFT

Acknowledgements

This report was developed through the culmination of many hours of in-depth research and analysis through outstanding collaborative efforts of the many disciplines involved with the Office of the State Fire Marshal **Flammability Standards for Building Insulation Materials Working Group**.

Members of the Flammability Standards for Building Insulation Materials Working Group:

Kevin Reinertson – Chair - CAL FIRE - Office of the State Fire Marshal

Barry Badders – Intertek

Eric Banks - BASF Corp., representing the Spray Foam Coalition of the Center for the Polyurethanes Industry (CPI)

Michael Bedard – Policy Director, Assembly Member Nancy Skinner

Jesse Beitel – Hughes Associates, representing the American Chemistry Council (ACC)

Payam Bozorgchami – California Energy Commission

James Carver – City of El Segundo, representing Cal Chiefs / SoCal Fire Prevention Officers Association

George Combs – Bayer Material Science LLC

Rian Evitt – San Ramon Valley Fire Protection District, representing Cal Chiefs / NorCal Fire Prevention Officers Association

Michael D. Fischer – Kellen Company, representing the Polyisocyanurate Insulation Manufacturers Association (PIMA)

Steve Fischer – Bureau of Electronic and Appliance Repair, Home Furnishings and Thermal Insulation (BEARHFTI)

Pravinray Gandhi – UL LLC

Gene Gantt – California State Firefighters Association

Andrew Henning – CAL FIRE - Office of the State Fire Marshal

Marcelo M. Hirschler – GBH International, representing the North American Flame Retardant Alliance (NAFRA)

Howard Hopper – UL LLC

Richard Lam PhD.– Cal-EPA

Avery Lindeman – Green Science Policy Institute

Donald Lucas – Lawrence Berkeley National Laboratory

Justin Malan – ECO Consult, representing the U.S. Green Building Council of California

DRAFT

Chris Martin –North American Insulation Manufacturers Association (NAIMA)
Nancy McNabb – National Institute of Standards and Technology (NIST)
Lauren Neyer – representing Cal Chiefs / NorCal Fire Prevention Officers Association
Robert Raymer – California Building Industry Association (CBIA)
Walter Reiter – EPS Industry Alliance
Lorraine A. Ross – Intech Consulting Inc., representing the Extruded Polystyrene Insulation Manufacturers Association (XPSA)
Paul Shipp- USG Corporation
Dwayne Sloan – UL LLC
Adria Smith – Riverside County Fire Department, representing Cal Chiefs / SoCal Fire Prevention Officers Association
Marjorie Smith – Architect- Siegel and Strain Architects
Paul Wermer – Paul Wermer Sustainability Consulting, representing the U.S. Green Building Council of California
Kevin White – California Professional Firefighters
John Woestman – Kellen Company, representing the Extruded Polystyrene Foam Association (XPSA)
Bennett J. (B.J.) Yendrey – San Jose Fire Department

Support Services Assistance:
Celeste Mahugh, Management Services Technician

The Office of the State Fire Marshal thanks each member and their organizations for their assistance with this important work.

DRAFT

Table of Contents

Message from the State Fire Marshal i

Acknowledgements ii

Table of Contents iv

Abbreviations and Definitions vi

Abbreviations: vi
Definitions (For the Purpose of this Report) vii

Executive Summary 1

Working Group Direction 2

Sources of Data 2

Working Group Scope 3

Focus 3
Insulation Applications 3

Code Requirements for Insulation 5

History of Fire Testing of Foam Plastics in Codes 5
Fire Performance in California Building Codes 6
Use of Fire Test Standards in the Codes 6
Flame Retardants Used in Insulation 7

Working Group's Discussion of Flame Retarded Foam Plastic Insulation and Fire Testing 8

Debated Key Points 8

Working Group's Pathway to Performance Standards 19

Chief Hoovers Redirection 31
Consideration of "Super" Assemblies 19
Transition from "Super" Assemblies to Performance Testing 19

Performance Standards 20

Recommendations 21

Conclusion 22

DRAFT

Appendix A- Assembly Bill 127 (Skinner, 2013) and additional Legislative Intent from the Assembly Journal 23

Appendix B- SFM's Directions to the Working Group 26

Appendix C- Letters to OSFM 28

Appendix D- Working Group's Pathway to Performance Standards Summery 29

29 January 2014 Meeting 29
25 February 2014 Meeting 29
20 March 2014 Meeting 29
17 April 2014 Meeting 30
29 May 2014 Meeting 31
26 June 2014 Meeting 31
24 July 2014 Meeting 31

Appendix E- Reference Standards 33

Fire Tests 33
Material Specifications 33

Appendix F- Building Code Requirements for Foam Plastic Insulation 35

Appendix G- Proposed Performance Tests 40

Wall Assemblies 40
Floor-Ceiling Assemblies 48
Crawl Space Assemblies 54
Conditioned Attic Assemblies 58

Appendix H- Under Slab/Subgrade Foam 65

Appendix I- Reference Publications 69

DRAFT

Abbreviations and Definitions

Abbreviations:

AB 127	California State Assembly Bill No. 127 (Chapter 579, Statutes of 2013) An act to add Section 13108.1 to the Health and Safety Code, relating to fire safety.
AC	ICC Evaluation Services Acceptance Criteria
ASTM	ASTM International
CBC	California Building Code
CFC	California Fire Code
CO	Carbon monoxide
CPSC	Consumer Product Safety Commission
CRC	California Residential Code
EIFS	Exterior Insulation and Finish Systems
EPS	Expanded polystyrene foam
HBCD	Hexabromocyclododecane
IARC	International Agency for Research on Cancer
IBC	International Building Code
ICC	International Code Council
ICC ES	ICC Evaluation Services
IRC	International Residential Code
ISO	International Organization for Standardization
LOI	Limiting oxygen index
NBS	National Bureau of Standards (now NIST)
NFPA	National Fire Protection Association
OSFM	Office of the State Fire Marshal
PAH	Polynuclear aromatic hydrocarbons or polycyclic aromatic hydrocarbons
PBDD/F	Polybrominated dioxins and furans
PIR	Polyisocyanurate foam
PUR	Polyurethane
SFM	State Fire Marshal
SIPs	Structural Insulated (or Insulating) Panels
SPF	Spray polyurethane foam
UL	Underwriters Laboratories
XPS	Extruded polystyrene foam

DRAFT

Definitions (For the Purpose of this Report)

Assembly Test. A test conducted on multiple materials configured in a specific way as they would be found within a structure, such as a wall or a floor/ceiling. The test assembly must represent the actual structure as it would be found in the finished building.

Ignition Barrier: In the context of the California Residential Code, prescriptive materials that specify protection from ignition of foam plastics in attics and crawl spaces that are non-habitable. Alternate ignition barriers to the prescriptive materials are evaluated in accordance with the fire test described in ICC AC 377 Appendix X or in ICC AC 12 Appendix B.

Material Test. A test conducted on a material used in constructing a building assembly. Such materials include insulation, studs, exterior siding or sheathing, plastics used for electrical boxes, etc. Examples of materials tests include ASTM E84 (Steiner Tunnel Test), or ASTM E1354 (cone calorimetry, oxygen consumption calorimetry).

Thermal Barrier: A material, product, or assembly that prevents or delays ignition of an unexposed surface by limiting the temperature rise and by acting as a flame exposure barrier for a 15-minute time period. (Definition per NFPA 275, 2013 edition)

Baseline Assembly. A basic assembly containing insulation that complies with the flame spread index and smoke developed index requirements of the California Residential Code §R302.10 (based on ASTM E84 testing).

Candidate Assembly. A basic assembly similar to the Baseline Assembly but that contains insulation that does not meet the flame spread index and smoke developed index requirements of the California Residential Code §R302.10.

DRAFT

Executive Summary

Assembly Bill 127 (AB 127), introduced by Assemblymember Nancy Skinner and signed into law in 2013, requires the California State Fire Marshal to review flammability standards for building insulation materials, including whether the flammability standards for some insulation materials can only be met with the addition of chemical flame retardants. Based on this review, if the State Fire Marshal, Tonya L. Hoover, deems appropriate, she will by July 1, 2015, propose updated insulation flammability standards to the Building Standards Commission for consideration.

The Office of the State Fire Marshal (OSFM) convened a Flammability Standards for Building Insulation Working Group (Working Group) in January 2014 to review published data and technical information, examine peer reviewed scientific studies and information, and propose recommendations to State Fire Marshal. These recommendations could include alternatives to current requirements in the California Building Standards Code that would maintain fire safety of buildings, building occupants, and first responders while allowing for the use of insulation materials without added flame retardant chemicals.

This report reflects the efforts of the Working Group. Throughout the process, consensus proved difficult on a number of important issues. This report sets out those issues and competing perspectives. The Working Group developed the following recommendations for Chief Hoover's consideration:

- Perform proof of concept testing for the proposed *Wall Assemblies, Floor-Ceiling Assemblies, Crawl Space Assemblies, and Attic Assemblies* performance test standards.

- Proof of concept testing should be designed so that adequate and usable data can be obtained from the performance standards.

- After the proof of concept testing, form a second smaller workgroup composed of fire service operations personal, fire marshals, representation from the initial Working Group and interested parties to review the test data and develop additional recommendations.

Several members of the Working Group recommended that Chief Hoover consider a code change to allow the use of non-FR foam insulation in under slab/subgrade applications. This proposal did not specifically achieve a recommendation from the Working Group to move forward, however, is included in this report for the SFM for review and further determination.

DRAFT

Working Group Direction

The Working Group was directed to focus on the following areas, which are consistent with new requirements in Health and Safety Code §13108.1, per AB 127 (Appendix A):

1. Review the California flammability standards for building insulation materials, including whether the flammability standards for some insulation materials can only be met with the addition of chemical flame retardants.

2. Determine if updated insulation flammability standards should be adopted that maintain overall building fire safety and ensure that there is adequate protection from fires that travel between walls and into confined areas, including crawl spaces and attics, for occupants of the building and any firefighters who may be in the building during a fire.

Sources of Data

The Working Group reviewed information published in reports, scientific publications, presentations, current research and test results, relevant codes, standards and regulations to form a basis for the Working Group's observations, conclusions and recommendations. To be considered, all documents had to include data and observations that are applicable to modern technologies, concerns and building construction practices. Anecdotal data would be considered by the Working Group, but not given as much weight as the technical data described above. Test data from sources outside of the United States was not considered because insulation formulations, installation requirements, construction techniques, fire test protocols, codes and standards in other countries are typically different from those adopted in the United States. Fire science, fire incidences, and history as an indicator of overall building fire safety were also considered.

Overall, Chief Hoover directed the Working Group to focus on "meaningful data" and referenced the STEEP (Social, Technological, Economical, Environmental and Political) process as a guide for the group's deliberation. As the Working Group discussions progressed, it became clear that this issue is very complex and investigation of the topic largely unprecedented, for example ASTM standards specifications for materials incorporate ASTM fire test standards by reference. The California code references these standards.

Appendix I contains some of the referenced documents that the Working Group considered during this process.

DRAFT

Working Group Scope

Focus

In April 2014, after a series of initial deliberations, the Working Group narrowed its focus to new construction of one and two family dwellings built with wood-framed non-rated construction (Type VB construction).

Any code changes the Fire Marshal should decide to pursue based on recommendations of this Working Group should be drafted for one-and-two family dwellings of Type VB construction. These changes would be shown in the Section R316 of the California Residential Code (CRC) and Chapter 26 of the California Building Code (CBC). CBC Chapter 26 makes a clear distinction between requirements for plastic foam insulation in Type VB construction versus requirements for all other construction types (see CBC 2603.5). Relevant occupancies for one- and two-family dwellings are classified as R-3 in Section 310.5 of the CBC.

The Working Group had concern with the potential hazards that non-FR insulation may pose during the manufacturing, transportation, warehouse storage, distribution and construction/installation and storage on the job site stages of their use. This was not evaluated within this report or by the Working Group. When and if code changes are proposed, the non-FR insulation will need to be evaluated to determine if additional safety precautions will be required.

Insulation Materials

The Working Group addressed the following thermal insulation materials used in buildings:

- Foam plastics. expanded polystyrene (EPS), extruded polystyrene (XPS), rigid polyurethane (PUR), spray polyurethane (SPF), polyisocyanurate (polyiso or PIR), phenolic, and others
- Cellulose loose-fill or spray applied
- Fiberglass, loose fill, batts, spray applied
- Mineral, Rock, Slag wool, loose fill, boards, spray applied
- Reflective
- Foamed glass, cementitious foam

Insulation Applications

The Working Group focused on insulating materials used for thermal or acoustic insulation within the building envelope.

Building envelope

This includes insulation used in the following locations and applications:

- Insulation used inside the building's interior and exterior wall cavities.
- Insulation that is continuous across all structural members without thermal bridges, other than fasteners and service openings, and installed on the interior or exterior side or integral to any opaque surface of the building envelope
- Insulation used between floors (for example, insulation used in the ceiling cavity of a floor/ceiling assembly)
- Insulation used in attic spaces, whether on the attic floor between ceiling joists or installed on the underside of the roof deck
- Insulation that is applied as part of the above deck roof covering system
- Insulation used in crawl spaces
- Insulation used as part of below grade insulation and in related thermal breaks

Exclusions

The Working Group did not consider insulation used in the following applications:

- Specialized exterior assemblies including Structural Insulated (or Insulating) Panels (SIPs), Exterior Insulation and Finish Systems (EIFS), External Wall Insulation Systems (EWIS) and similar systems
- Insulation used as part of a cold room or freezer room
- Mechanical equipment
- Ductwork
- Piping
- Appliances and other installed equipment
- Insulation used in plenums
- Inside doors

Material Flammability Standards

The Working Group explored code alternatives to the currently required material flammability standards in the California codes, including ASTM E84. The Working Group did not propose restricting or banning the use of insulation containing flame retardants. Rather, the intent was to provide a choice of whether or not to use plastic foam insulation with added flame retardants or without added flame retardants. Therefore contractors may

DRAFT

choose to continue to use foam with added flame retardant chemicals in accordance with the California Building Standards Codes (CBC and CRC). The Working Group did not focus on economic impacts because the proposed code changes will be an optional compliance path for builders.

Metrics

Proposals resulting from Working Group discussions are intended to fulfill the directive to maintain the existing level of fire safety for specific applications. It was agreed that baseline testing data is necessary to determine whether the directive is met.

See the *Use of Fire Test Standards in the Codes* within the *Code Requirements for Insulation* section and the *Performance Standards* section for additional details.

Code Requirements for Insulation

History of Fire Testing of Foam Plastics in Codes

In the late 1960s and early 1970s, foam plastic insulation was introduced into the construction market and its use rapidly expanded in response to energy crisis in the early 1970s. These early materials typically did not contain flame retardants and standards and code regulations were lacking. After a number of tragic fires, the Federal Trade Commission (FTC) investigated the manner in which foam insulation manufacturers were describing the fire performance of their products.

Issued on November 4, 1974, the FTC Consent Cease and Desist Order focused on the use of small-scale combustibility tests. This order directed the industry to:

- Cease using “non-burning”, “Self-extinguishing” or non-combustible” when describing foam plastic products
- Any reference to numerical flame spread ratings based on small scale tests, such as ASTM E84 contain a disclaimer: “This numerical flame spread rating is not intended to reflect hazards presented by this or any other material under actual fire conditions.”

Another outcome of the FTC action was a joint effort by the foam plastics industry, UL and the National Institute of Standards and Technology (NIST), to conduct additional research and develop new fire tests for foam plastics. These included material tests (single material) and assembly tests (multiple materials configured in a specific way as they would be found within a structure). The result was the adoption of a new chapter with building code

requirements for foam plastics in the 1976 Uniform Building Code that required ASTM E84 testing with limits of 75 flame spread and 450 smoke developed indexes AND the use of a thermal barrier, typically ½" gypsum board separating the foam from the interior of the building. These material requirements are similar to those in use today and have expanded to address the safety of emerging new formulations and applications of foam plastic insulation. (Appendix F).

Fire Performance in California Building Codes

The California Building Standards Commission adopts and regularly updates the California Building Code and California Residential Code through a transparent process that includes public hearings. The California codes are based on the International Building Code and International Residential Code, which are developed by the International Code Council through a series of public hearings. Among other objectives, the purpose of these codes is to establish minimum requirements to safeguard life and property from fire and other hazards attributed to the built environment and to provide safety to firefighters and emergency responders during emergency operations.

Use of Fire Test Standards in the Codes

The CBC and CRC require a combination of specific material types and construction practices intended to provide adequate levels of fire safety for specific occupancies and building types. In many cases, fire safety is accomplished by requiring building materials and assemblies to comply with specific fire test standards adopted by reference in the code. These fire test standards evaluate the fire test performance of the materials and assemblies in terms of their responses to the specified fire exposure.

Fire test standards typically describe a standardized test procedure, although some may include metrics for pass/fail results. With a standardized test procedure, building codes will reference both the fire test standard to which a material should be tested and specific fire test response characteristics the material should exhibit. Examples of such fire test standards applicable to insulation materials, depending on the application, are included in Appendix E. Some fire test standards are applicable only to certain insulation materials. For example, cellulose loose-fill insulation must comply with United States Consumer Product Safety Commission regulation, which includes passing two fire tests in 16 CFR 1209 and being labeled in accordance with 16 CFR 1404.

Fire test standards provide a standardized test method for testing laboratories to ensure comparability of results. While the code will specify the materials and constructions that must be subjected to the test, it does not dictate the material's composition or formulation. For example,

manufacturers often use flame retardant chemicals to pass fire tests such as ASTM E84, but the code neither requires nor restricts flame retardants.

Fire test standards can apply to materials, or assemblies that more closely represent building constructions, such as a wall or a floor/ceiling. In terms of assessing safety implications, tests that evaluate the performance of an assembly, such as time to failure, often offer more useful insights into critical safety issues than material tests that only evaluate a single component of a building assembly. However, as a prerequisite, most assembly tests referenced in the CBC require a fire characterization of the component materials.

In addition to fire testing of materials and assemblies, the code may also require certain fire safety-related construction techniques. For example, most fire tested foam insulation must also be protected with an appropriate thermal barrier, such as 0.5-inch gypsum wallboard that separates the foam from the building occupants in habitable spaces. In attics or crawl spaces, which are not habitable spaces, the foam can be protected by prescriptive ignition barriers, or in the case of successful performance in representative large scale fire tests, can be left exposed.

Appendix F summarizes the CBC and CRC requirements that apply to foam, cellulose and other building insulations in specific applications.

Flame Retardants Used in Insulation

Many materials used as building insulation rely upon the addition of flame retardant chemicals to meet code-mandated fire test requirements. Other requirements may also lead to the use of flame retardants in these materials. Several examples are included below:

- Cellulose loose-fill insulation: relies upon flame retardants such as boric acid, borax, other borates, or ammonium sulfate to meet building code and Consumer Product Safety Commission requirements.
- EPS or XPS for use in certain applications must comply with ASTM C578, which requires that the materials meet an oxygen index (or LOI) that cannot be achieved without the use of flame retardants. These applications are detailed in R403.3 (frost-protected shallow foundations); R613.1 (SIPs); R703.11.2.1 (vinyl siding with foam plastic sheathing); R906.2 (above-deck roof insulation); and CBC 1508.2 (above-deck thermal roof insulation).

Flame retardant chemicals will not be addressed individually in this report. Potential health effects relating to flame retardants used in insulation materials were considered to be outside the scope of this Working Group.

Working Group's Discussion of Flame Retarded Foam Plastic Insulation and Fire Testing

Implementation of AB 127 required an understanding of whether the flammability standards for some insulation materials can only be met with the addition of chemical flame retardants. This led to a literature review of research related to flame retardants in foam insulation. (See Appendix I for literature review documents.) Throughout the process, members of the Working Group held divergent opinions on several key issues, including:

- The technical validity of using ASTM E84 for some types of plastic foams.
- In the case of a cavity constructed in violation of the building codes (without proper fire-stopping), does the ASTM E84 rating for plastic foam insulation materials reliably predict fire propagation in the cavity?
- Does compliance with ASTM E84 test requirements provide for acceptable/safe fire behavior of exposed plastic foam insulation materials?
- Is the replacement of ASTM E84 necessary, as code provisions for thermal barriers provide adequate fire safety for finished buildings?
- Do current thermal barrier and fire-stopping requirements protect insulation from fire for at least 15 minutes of post-flashover conditions?
- Does insulation without flame retardants pose an increased fire risk during the construction and demolition phases on the building site?

Debated Key Points

The following section highlights several key discussion points upon which the Working Group could not achieve consensus. The nine (9) questions below are each followed by two (2) primary, yet divergent, positions demonstrated by the Working Group. In an effort to help the reader to focus on the content of the discussion points and responses, the responses below are identified as "Position 1" and "Position 2." The questions posed were written and selected by the OSFM.

DRAFT

1. Can overall building fire safety be maintained without adding chemical flame retardants to building insulation materials?

Position 1:

Plastic foam building insulation can be used safely without added flame retardants.

Certain building applications of foam insulation do not present a fire hazard because the insulation is protected from ignition, for instance when insulation is used below grade of a building between the foundation and soil (POPRC 2011). Fire safety of foam plastic insulation materials is provided in other applications by the presence of fire stopping and thermal barriers, fire resistant materials that delay or prevent involvement of the foam in a fire (Lassen et al. 2011). With proper fire stopping and fire blocking, fire spread within wall cavities can be prevented. Indeed, research has shown that the material flammability of common plastic insulation foams as evaluated by ASTM E84 is not a determining factor in the spread of fire within a wall cavity (Choi and Taylor 1984).

Sweden and Norway have adopted building regulations that allow for the use of plastic foam insulation materials without added flame retardants (Blomqvist et al., 2011; Lassen et al., 2011; Posner et al., 2010). In these countries, fire safety has been maintained with minimal alterations to traditional building practices. In Norway, there have been no accidental fires involving EPS since 2004, when codes were updated to allow for the use of these materials without flame retardants. Flame retardants are not added to polystyrene insulation materials manufactured for use in Sweden and Norway (POPRC 2011).

Position 2:

No. In the 1970s, non-flame retarded foam insulation was a contributing factor to several catastrophic fires, leading to the loss of lives, including children. In 1976, the Uniform Building Code added new regulations for foam insulation by limiting flame spread/smoke development using ASTM E84, combined with a thermal barrier, such as gypsum board. Today, overall building fire safety relies upon an integrated system of code regulations for material and assembly fire test performance, compartmentalization, and fire suppression. Changing one part of this system by removing flame retardants (FR) from combustible insulation requires an extensive evaluation of potential fire scenarios.

Fire tests show that different types of FR-foam insulation exhibit improved fire performance than the non-FR insulation: FR-insulation has an ASTM E84 Class B, compared to an unclassified index for non-FR foam; FR- foam insulation has an Oxygen Index (LOI) of 21 compared to an LOI of 17 for the non-FR foam; and lower heat release rate in the cone calorimeter (ASTM E1354) for FR foam vs the non-FR version.

Compared to non-FR foam insulation, FR foam insulation offers added time before ignition and much lower heat release after ignition, thus adding critical time for escape, rescue and activity by firefighters before flashover. Penetrations (ducts, pipes and electrical outlets) through code required thermal barriers are rarely fire-stopped, allowing a potential avenue for rapid fire spread between concealed and occupied spaces. While NFPA statistics (2006 – 2010) show that insulations are the first item ignited in only 2% of home structure fires and associated with <1% of overall fire deaths, this excellent fire history is based largely on FR products.

DRAFT

2. Will building occupants and firefighters have adequate protection from fires that travel between walls and into confined areas, including crawl spaces and attics, without adding chemical flame retardants to building insulation materials?

Position 1:

Fire stopping, fire blocking, and thermal barrier requirements provide fire safety for firefighters and first responders. These techniques allow for fire safe construction with plastic insulating foams, regardless of whether or not they contain flame retardants or are tested to ASTM E-84 criteria.

Common plastic foam insulation materials that are compliant under current codes should not be used without adequate protection from ignition, requiring the use of a thermal barrier, fire stopping, and similar techniques. Studies have shown that "favorable" flame spread ratings of plastic foam materials (as determined by ASTM E84 and achieved via the addition of flame retardant chemicals to foam) do not guarantee a favorable fire performance in certain fire tests, including corner and room tests and tests of flame spread within wall cavities (Williamson and Baron, 1973; Castino et al., 1975; Choi and Taylor, 1984).

Therefore, the addition of flame retardant chemicals at levels used to meet current codes does not provide an improvement in fire performance of installed plastic foam building insulation. Plastic foam insulation without these added flame retardants can be used while providing equal or better fire safety.

Position 2:

No. There are no data supporting adequate protection from fires in these scenarios with non-FR foam insulation. Fire history shows that code requirements (1976 – 2014) for foam insulation provide adequate fire safety. NFPA statistics show that fires in concealed spaces, much of which contain flame retarded foam insulation, and other materials, do not significantly contribute to fire losses. Since current energy-efficient foam insulations are formulated with FRs to meet code requirements, it is a reasonable expectation that these products, without flame retardants, will have higher flame spread indexes and the resulting flames will travel farther from a given fire source. Such fires are also likely to burn hotter, and may potentially overwhelm fireblocking, cascading into a larger fire. An added unknown is the potential ease with which concealed non-FR foam plastic insulation could ignite when exposed to a source such as an electric arc.

While it may be possible to use more restrictive thermal barriers and fireblocking measures if non-flame retarded foam insulation is used in concealed spaces, such changes will not guarantee equal fire protection for firefighters without extensive testing of all fire scenarios, including a careful review of fire history. Additional issues with using non-flame retarded foam insulation include hotter pool fires, faster fire penetration leading to less time available for escape, rescue and/or firefighter activity.

DRAFT

3. Are the current fire test methods, specifically ASTM E84, as required by the California Building Code an accurate test to predict the performance of foam plastic insulation during most residential structure fires?

Position 1:

ASTM E84 tests surface fire spread of bare materials in one specified geometry and under one set of test conditions. This test method is not an appropriate means of establishing fire safety of plastic foam building insulation, since plastic foam materials can melt, drip, delaminate, or intumesce (swell) to such an extent that the results of the test method are artificially favorable (ASTM, 2012; Factory Mutual, 1974 & 1978; Rose, 1975; Babrauskas et al., 2012).

Commonly used plastic foam insulations may not be used in habitable spaces without being covered by a thermal barrier (0.5-inch gypsum wallboard or equivalent). ASTM E 84 results for plastic foam do not test foam materials behind a thermal barrier; therefore these results do not provide an indication of the fire performance of installed plastic foam insulation in habitable spaces.

Studies comparing certain full-scale fire tests of plastic foam building insulation with their performance in ASTM E84 have shown that ASTM E84 results do not correlate to improved performance in other fire tests. Specifically, plastic foams that perform "well" in ASTM E84 testing can perform very poorly in other fire tests and in real fire scenarios (Castino et al., 1975; Lee, 1985; Rose, 1975; Williamson and Baron, 1973).

Position 2:

No fire test, whether on a material alone or an assembly, precisely predicts fire performance in a real fire, nor will any two fire tests correlate perfectly with each other. By their very nature, fire tests are performed under controlled conditions, whereas "real world" fire conditions are unpredictable. Since the 1950s, ASTM E84 has undergone regular updates and sees continued use to evaluate interior finish materials and other products. Thus, its long term use by codes demonstrates its value as a screening tool to regulate the fire performance characteristics of materials.

For foam insulation, studies comparing ASTM E84 results with the large-scale room-corner test (NFPA 286) demonstrated that, generally, materials performing well in NFPA 286 also perform well in ASTM E84. Similarly, materials that perform badly in ASTM E84 perform badly in NFPA 286. However, it is also well known that some materials, such as very thin or very lightweight materials, or those that melt and drip, can show adequate results in the ASTM E84 and poor results in NFPA 286. Clearly, some low flame spread index results in the ASTM E84 test can be associated with poor fire performance but high flame spread index results in the ASTM E84 test are always associated with poor fire performance.

Fire safety in codes does not rely upon any single fire test, including ASTM E84 for foam insulation or any material. The Codes combine multiple fire performance tests to form layers of protection that work together to manage the growth and spread of a fire in buildings should one occur.

DRAFT

4. Can performance test comparing a baseline assembly and a candidate assembly ensure that overall building fire safety, including the safety of building occupants and firefighters, be maintained at current (legacy) construction fire performance levels?

Position 1:

No evidence has been presented suggesting that plastic foam insulation without added flame retardants would be inadequately protected by code-compliant barriers.

Typical code-compliant plastic foam insulations can be safely used only if protected from habitable spaces by a thermal barrier. Thermal barriers provide protection for at least fifteen minutes after flashover.

A collection of test data comparing "baseline" and "candidate" assemblies is not needed, but could demonstrate both (a) the level and range of fire safety provided by current codes, and (b) that fire safety can be maintained in buildings containing foam insulation without flame retardants. Sweden and Norway provide case studies of such "candidate" assemblies being used safely in construction.

We have the following concerns about the proposed testing:

(1) A one-to-one comparative test protocol such as that outlined by this Working Group is not appropriate for codification in the CRC or CBC. A single test of one "baseline" wall assembly cannot reflect the range of construction types and materials currently allowed under codes. Such a test will not accurately represent the average, or standard deviation of, fire performance of typical "legacy" construction. It is inappropriate to use such a test as a "baseline" for minimum performance required of a "candidate" assembly.

(2) This testing regime is needlessly burdensome and restrictive.

(3) A working group process may not identify appropriate metrics for evaluating fire safety of plastic foam insulations within wall and other assemblies.

A single time-based criterion for thermal barriers or assemblies could be appropriate for certification of plastic foam with and without added flame retardants.

Position 2:

Unknown. Fire test and performance requirements for foam insulation currently in the California Residential Code have the benefit of decades of real-world performance and have proven effective at providing fire safety, as evidenced by the steady decline in losses of life and property to fire even with increased population and population density. Any proposal to allow the use of non-FR foam insulation requires solid proof of concept, validation, confirmation and durability studies. The performance of a material in one assembly test is only indicative of a material's performance in that specific fire scenario and construction method.

What criteria will deem the candidate assembly as "safe"? Are results for the candidate assembly within 90%, or 95%, or 98% of the baseline assembly safe? What about material or assembly deviations from the tested assembly? These questions are but one small part of the technical justification for any code change related to fire. If any changes to the fire exposure, construction, etc. are made to the comparative test conditions, then the results of the test may no longer be applicable. Furthermore, comparative testing such as what is proposed will limit the use of the non-FR foam insulation to one, specific assembly with no allowable material or component substitutions. How will the non-FR insulation be identified on the job site? What assurance will exist to prevent misapplication?

Fire testing, performance requirements and construction practices together form the multiple layers of measures that contribute to overall building safety. Comparative fire testing alone will not assure an equivalent level of safety.

DRAFT

5. What are the toxicity and health effects of the adding chemical flame retardants to building insulation materials to firefighters?

Position 1:

Flame retardants used in plastic foam building insulation pose a chronic health risk. They have been associated with health harm including hormone disruption and developmental toxicity (Crump et al., 2012; Dishaw et al., 2011; Eriksson et al., 2006; Marvin et al., 2011; USEPA, 2008; Van der Veen and deBoer, 2012). An emerging flame retardant for polystyrene insulation has not been adequately tested for safety and poses hazards to human health and the environment throughout its lifecycle. Firefighters are exposed to these harmful or untested flame retardants in building insulation especially during cleanup and overhaul operations.

The presence of these halogenated flame retardants in plastic foams increases formation of toxic halogenated dioxins and furans during combustion (Babrauskas et al., 2012; Ebert and Bahadir, 2003; Weber and Kuch, 2003). Firefighters have an elevated risk of cancer compared to the general population, and there are higher rates among firefighters of certain cancers associated with dioxin exposure (LeMasters et al., 2006). Exposure to flame retarded materials – like plastic foam building insulation – and their combustion byproducts may contribute to this elevated incidence of cancer among firefighters (Shaw et al., 2013). Given that fire safety can be achieved without adding flame retardants to plastic foam insulation, this risk of chronic health harm should not be tolerated.

These flame retardants and their combustion byproducts represent chronic, rather than acute, toxicity concerns. With or without added flame retardants, the combustion of plastic foam insulation materials produces acutely toxic gases at unsafe levels (Babrauskas et al., 1991; NBS, 1980).

Position 2:

Regardless of flame retardant presence, all fires produce toxic smoke containing hundreds of chemicals, primarily carbon monoxide (CO), including carcinogens, and are generally similar whether from a wildfire or a residential fire. Toxicity of smoke in a fire depends on the amount of material burnt, distribution of combustion products, individual toxicity of each combustion product and the duration of exposure. Fire fatalities are overwhelmingly associated with CO generated when fires approach flashover, because 20% of the material burnt has been converted into CO irrespective of fuel composition or ventilation.

Firefighters are justifiably concerned about acute exposure to carcinogens and particulate matter as well as chronic and repeated exposure during all phases of their response to fires. All fires generate highly carcinogenic polycyclic aromatic hydrocarbons (PAH), which are usually adsorbed onto soot particles. While some FRs can contribute to formation of polychlorinated (PCDD/F) or polybrominated (PBDD/F) dioxins and furans when they burn, EPA states that dioxins and furans also occur in the absence of flame retardants, noting that “dioxins can be released into the environment through forest fires and backyard burning of trash.”

Studies show that in fire atmospheres, both the concentration and toxicity of PAHs are much higher than that of polyhalogenated dioxins and furans. In other words, data indicate that thermal/fire decomposition products for flame retarded products pose a negligible additional risk to firefighters compared to the existing, much higher risk they face from known human carcinogenic PAHs found in all fires.

DRAFT

6. Do thermal barriers and firestopping code requirements protect building insulation materials, with or without chemical flame retardants, from fire for at least 15 minutes of post-flashover conditions? Additionally, what is the impact on firefighters operations that exceed 15 minutes?

Position 1:

Thermal barriers and fire stopping can protect building insulation materials – with or without added flame retardant chemicals – for at least 15 minutes of post-flashover fire conditions.

Code compliant thermal barriers include: gypsum wallboard with a minimum thickness of 0.5 inches; concrete; soil; and other materials tested to NFPA 275. Use of appropriately fire stopped thermal barriers ensures that (1) the temperature on the far side of a thermal barrier exposed to post-flashover conditions does not exceed the ignition temperature of plastic foam insulation materials for a minimum of 15 minutes, and that (2) fire does not penetrate the thermal barrier and enter the wall cavity (Babrauskas et al. 2012). Proper fire blocking protects against spread of fire within the wall cavity.

Current code requires foam insulation to be protected by a compliant thermal barrier when installed in a habitable space. Insulation used in certain other applications, as in attics and crawl spaces, must be protected by an ignition barrier (as opposed to a thermal barrier). This distinction in the codes is appropriate, since these spaces are not occupied. The use of barriers and fire stopping in these constructions could similarly allow for the safe use of foam plastic insulation without flame retardants.

Occupants and firefighters cannot safely withstand long durations of time inside a building that has been burning for more than 15 minutes post-flashover. Roof and other structural areas may be severely compromised after 15 minutes of post-flashover fire, regardless of what type of insulation is used.

Position 2:

Flashover is typically considered as a point in a fire when all combustibles become involved and temperatures reach ~1,200°F. Current code requires the thermal barrier to provide a minimum 15-min of escape time prior to flashover, but no required evaluation after flashover. The thermal barrier, typically ½" gypsum board, will protect the underlying foam insulation for a period of time when exposed to a moderate fire exposure. Once the fire has progressed beyond flashover, the thermal barrier will slowly degrade and the foam insulation behind it will become involved if sufficient fuel remains to sustain the fire. At this point, firefighter activity in the flashed over compartment will no longer be possible and those in adjacent areas may also be impacted due to rapid fire spread.

The best protection for fire fighters is to delay ignition of the foam insulation as long as possible. The code accomplishes this by limiting flame spread of the foam insulation and requiring a thermal barrier. Thermal barriers must be tested in accordance with NFPA 275, which requires: 1) the thermal barrier alone resists the ASTM E119 time temperature exposure, from 70°F to 1,400°F, for 15-minutes and 2) the thermal barrier in combination with specific code complying foam insulation must not reach flashover for 15 minutes when tested in the large scale NFPA 286 room corner test.

If foam insulation is not flame retarded, the penetration of fire through the building envelope or into other compartments will likely be much faster and the fires will be hotter, resulting in increased danger to fire fighter operations, especially if walls are breached to ventilate the area, or to evaluate the extent of fire progression.

DRAFT

7. The California Building Code does not regulate a material's use during the construction or demolition building phase. Typically building insulation materials can be found stored in bulk at a worksite. Do worksites with building insulation materials without the addition of chemical flame retardants pose an increased fire and life safety risk, as compared to worksites that have building insulation materials with the addition of chemical flame retardants?

Position 1:

Insulation without added flame retardant chemicals can be used without lessening fire safety in storage or on worksites.

Expanded polystyrene (EPS) geofoam used in construction in Norway has been free of added flame retardant chemicals since 2004, and there have been no accidental EPS fires since that time. In Norway, fire safety on the worksite is maintained by employing careful cutting and welding practices and other precautions, as well as with surveillance and by fencing off worksites (POPRC, 2011). Similar practices should be used in the United States to ensure safety on worksites, and should be employed regardless of whether added flame retardants are used in plastic foam insulation.

Current code-compliant insulation containing flame retardants does not afford a significant fire safety benefit in the event that it ignites when exposed during construction or in bulk storage on a worksite. This has been demonstrated through fire testing of exposed foam plastic insulation. Insulation with favorable ASTM E84 ratings that contains added flame retardant chemicals has been shown to perform very poorly in room and corner tests of exposed insulation (Castino et al., 1975; Lee, 1985; Rose, 1975; Williamson and Baron, 1973). There is no reliable correlation between performance in ASTM E84 (and the use of added flame retardants) and a decreased fire hazard presented by bare foam (Babrauskas et al., 2012). SPF containing flame retardants has been identified in some cases as a cause of fire through spontaneous combustion of improperly-applied foams.

Position 2:

Yes. Fire history shows that significant fire losses have occurred during construction or renovation. During construction, repair and retrofit projects, combustible materials, such as foam insulation, can be exposed to ignition sources like open flames from welding or cutting torches. As discussed earlier, heat release rate data indicates that non-FR foam insulation burns hotter and faster than the flame retarded version.

Manufacturers are concerned about the safety of workers producing non-FR foam insulation in their plants, as well as workers installing these products on the jobsite. Potential risk arises from the transport and storage of non-FR foam. Chain-of-custody issues are another factor. Foam insulation is sold through highly fragmented building materials distribution channels to reach both the contractor and the consumer. These channels include professional lumber dealers, retail, wholesale, and specialty distributers ranging significantly in size. As a result of this long-standing distribution system, manufacturers cannot control who or how builders and consumers ultimately choose to install their products. Sprinkler design for warehouse storage is based upon flame retarded foam so it is unknown if design changes, such as increased water flow or larger sprinkler heads, will be needed for storage of non-FR foam insulation.

Foam insulation boards with different fire properties stored on the worksite can lead to potential misapplication of materials and increased fire risk during construction and after the building is completed. The use of non-FR foam insulation in assemblies that require flame-retarded materials will raise code enforcement issues.

DRAFT

8. Attics found at one-and-two family dwellings, typically have a large quantity of building insulation materials that are not encapsulated within an assembly. Will building insulations without chemical flame retardants pose an increased fire and life safety risk, to building occupants and firefighters, as compared to building insulation materials with the addition of chemical flame retardants within an attic?

Position 1:

Under current building codes, an ignition barrier must be used to protect plastic foam insulation in attic spaces. Plastic foam insulation materials without flame retardants can be similarly used behind ignition barriers in attic spaces without diminishing existing levels of fire safety.

No evidence has been presented to suggest that ignition barriers in attic spaces provide insufficient levels of fire safety. However, fire safety could be improved if a thermal barrier, rather than just an ignition barrier, were mandated for these applications, irrespective of the addition of flame retardants to plastic foam building insulation. This could increase safety for firefighters inside a burning building or needing roof access during fire operations.

Position 2:

Responding to attic fires poses a particular hazard for firefighters, especially if ventilation operations are required. The California Residential Code regulates the flammability of all insulation materials exposed within attics, including cellulose loose fill insulation via CPSC requirements for critical radiant flux, per ASTM E970 and for smoldering, while foam insulation must meet an ASTM E84 flame spread index of 75 and be protected by an ignition barrier. While the use of an ignition barrier in lieu of a thermal barrier provides significantly less protection to the foam insulation, FR foam insulation still performs well under these requirements. If non-FR foam is used, its performance in conjunction with an ignition barrier is undetermined.

As discussed earlier, non-FR foam insulation has poorer fire performance than flame-retarded foam insulation. If non-flame-retarded cellulose loose fill does not meet the CPSC requirements, increased flame spread and smoldering hazard can lead to open flaming. If the non-flame- retarded insulation is involved at a potentially earlier time in the fire it will produce a higher heat release rate into the attic.

In the event of a fire in the attic, firefighters will be exposed to an increased hazard due to premature roof collapse or back-flashes when the attic is ventilated or opened.

DRAFT

9. Are the proposed testing requirements/code proposals for building insulation materials without chemical flame retardants feasible, affordable, and appropriate?

Position 1:

The testing regime outlined in conjunction with this working group document, if performed as proof-of-concept with a variety of different insulation materials and constructions, may provide a means of confirming comparable fire performance of installed foam materials with and without added flame retardants. However, the comparative testing protocols are not appropriate for codification in the California Residential Code or California Building Code.

The comparative testing proposed as a means of certification for foam insulation without flame retardants is arbitrary and needlessly burdensome. It may prevent certification of insulation materials with favorable fire performance on the basis of a single data point that will not reflect the range of fire performance currently allowable under codes, and could allow poorer-performing "candidate" materials and assemblies to be certified while not permitting better-performing "candidate" materials and assemblies.

A more meaningful approach would be to compile a body of data about performance of current code-compliant ("legacy") plastic foam insulation materials in fire tests of common assemblies. It is important for any testing to include a variety of different materials in order to gain sufficient understanding of the range of product performance currently allowed under California code. Performance of insulation without added flame retardants could then be put into this context to determine whether adequate fire safety is provided. This would be similar in practice to the system for establishing compliance with hourly-rated construction requirements, and would be based on the time-to-failure of common code-compliant assemblies.

Position 2:

Doubtful. Any answer to this question would be premature since no actual fire testing, nor any proof of concept fire testing, has been conducted. Until fire test data are generated and criteria for margin of safety are developed, it is unclear whether the proposed testing requirements will result in constructions that are appropriate, safe, feasible, and affordable. The proposed, limited testing will only allow some applications into very specific constructions. These constructions may or may not be viable with additional changes which would need additional testing. Presently, there are no commercial non-FR foam insulation materials available in the US that meet all the physical, energy efficiency and other requirements of California codes and referenced standards. Manufacturers wishing to produce a non-FR foam insulation will incur costs for reformulation, potential plant modifications, separate inventories and qualification fire and physical property testing. The added costs associated with the requirements for more robust construction assemblies may or may not provide additional hurdles to builders wishing to use non-FR insulation.

Based on past fire history, it is possible that some current and unforeseen new fire hazards may result from using non-flame-retarded foam insulation; the "regrettable substitution" risk. The key concept in fire safety is to start with "fire hardened materials" so as to ensure that as many threats as possible are covered, especially ones that are not easy to imagine. A good example of a fire exposure often unexpected are wildfire's burning embers that travel for a mile or so before contacting a roof or entering an attic and starting a fire.

DRAFT

10. Where non-FR foam insulation is installed under slab/subgrade, does it pose a hazard to building occupants or firefighters during a fire? This question pertains to the actual built environment.

Position 1: **Position 2:**

DRAFT

Working Group's Pathway to Performance Standards

The Working Group transitioned several times before coming to a final decision to move forward with a Performance Standards methodology. The scope and focus of the evaluation evolved over the course of the Working Group's meetings. A summery and timeline relative to the scope and focus of the Working Group is provided in Appendix D.

Consideration of "Super" Assemblies

The Working Group narrowed its scope to One- and Two-Family Residential dwellings built out of Type VB construction during the April 2014 Working Group meeting. The original plan was to construct a "super" assembly that could be constructed in a way to contain any non-flame retardant insulation that would meet and or exceed fire safety standards compared to a standard wall built with flame retardant insulation. Several different "super" assemblies were brainstormed that included a non-rated wall assembly, floor ceiling assembly, attic space assembly, and a crawl space assembly. These "super" assemblies were discussed at detail through the September 2014 Working Group Meeting. After much debate the work group decided that it would be impractical to create one assembly that could contain any type of non-flame retardant regardless of its flammability.

Transition from "Super" Assemblies to Performance Testing

During the September meeting, the work group transitioned away from "super" assemblies, to a performance standard administered by the California State Fire Marshal. With the performance standards, a *Candidate Assembly* would be compared to a *Baseline Assembly*. The fire test will evaluate a Candidate Assembly to see if it meets and/or exceeds the fire safety performance of a Baseline Assembly that meets the CRC §R302.10 requirements.

The Working Group agreed that Fire Performance Test proposal made to the California State Fire Marshal should be assessed with proof of concept testing (both reaction-to-fire and fire resistance) to ensure the maintenance of adequate fire safety in accordance with the language of AB 127.

Fire performance test comparing Candidate Assemblies using non-flame retardant foam plastic insulation with the fire performance of typical Baseline Assemblies permitted by current building code (including compliant flame retardant insulation). At present, no U.S. manufacturer provides commercial materials that do not comply with ASTM E84 flammability requirements, but in order to conduct the proposed testing, such foam plastic insulation materials without added flame retardants must be procured. These materials

DRAFT

shall comply with all requirements imposed by the State of California, including those in the applicable ASTM material specifications except for flammability requirements (flame spread index, smoke developed index and limiting oxygen index (LOI)). Suggestions for procuring such foam plastic insulation materials include: purchasing them in a foreign country (e.g. Sweden); or commissioning a manufacturer to produce them for the California Office of the State Fire Marshal.

Performance Standards

The Working Group recommends that testing should involve testing with variations of both the ASTM E119 (UL 263) fire resistance test and the NFPA 286 room-corner test for each type of assembly described below. Tests should be run for standard code-compliant assemblies with conventional insulation containing flame retardants. The tests should then be conducted for proposed assemblies containing foam plastic insulation without added flame retardants. A comparison of these different assemblies should be made based on the criteria contained in the test methods proposed by the Working Group. Some members of the Working Group suggested that the NFPA 286 test (or the corresponding test from ICC AC12 or AC 377) should be conducted to failure based on the interior finish code criteria (CBC/CRC), rather than terminated at 15 minutes as called for in the standard. The rationale of running to failure is to be able to ensure that overall building fire safety is maintained with the new proposed assemblies. These test results will be used to determine if there is an increased risk to firefighters during operations, increased risk of fire spread within the structure, and/or an increased risk to neighboring structures. However, a means of interpreting such results has not yet been determined. It is not known how different code-compliant flame retarded insulations would perform in the NFPA 286 test when run to failure; therefore a comparison with the performance of the insulation that does not contain added flame retardants will be difficult, and such a comparison may not be appropriate or meaningful. Under the current building code, the fire test is terminated after 15 minutes and no additional testing is required.

Foam plastic insulation materials that have not been tested to ASTM E84 would need to be identified in such a way that they are not confused with other materials at the work site. We can look to current methods used to identify materials that have a range of fire properties but essentially look similar, such as gypsum board, glass, and doors. We can also look at labeling methods used in Europe to identify foam insulation without added flame retardants.

DRAFT

Listing and/or labeling requirements for insulation that does not contain added flame retardants would need to be modified to exempt particular products from standards for fire testing. These standards may include the fire test requirements from: ASTM E84, ASTM D2863, ASTM C578, ASTM C1029, ASTM C1289, and ASTM C591. Nationally recognized testing labs should be consulted for the best method of listing exemptions.

In addition to the proposed tests noted below, consideration should be given to evaluating fire performance of assemblies containing foam with and without added flame retardants where the ignition source is within a wall cavity or electrical box; the ignition source is external to the wall (similar to NFPA 285); and the ignition source is external to the roof system (similar to ASTM E108 / UL790).

The text of the Performance standards can be found in Appendix G.

Recommendations

The AB 127 Workgroup makes the following recommendations to Chief Hoover:

- Perform proof of concept testing for the Non-Rated Wall Assembly, Floor-Ceiling Assembly, Crawlspace Assembly, and Attic Assembly.
- Proof of concept testing must ensure that adequate and usable data can be obtained from the performance standards.
- After the proof of concept testing, form a second smaller workgroup composed of fire service operations personal, fire marshals, and interested parties. Goals of the second workgroup should include:
    - Determine pass criteria for pass/fail of the Candidate Assembly compared to the Baseline Assembly
    - Determine if the performance standards need modification.
    - Determine if new amendments should move forward to the CBC, CRC, and CFC.
    - If new amendments are recommended, the draft language for the amendments.

Proposals for under slab/subgrade use of non-FR foam insulation were presented to the Working Group. The proposal (see Appendix H), once installed/concealed between earth and concrete slab did not appear to represent a major risk and testing would be moot. However, there is concern with non-FR insulation during the manufacturing, transportation, warehouse storage, distribution and construction/installation and storage on the job site (see discussion in Working Group Scope Focus). This proposal

did not achieve a recommendation from the Working Group to move forward, however, is included in this report for the SFM for review and further determination.

Conclusion

The Working Group spent a significant amount of time exploring issues related to the need for foam insulation to comply with existing CBC and CRC flammability requirements, and whether there are situations where non-FR foam insulation can be used without decreasing the overall building fire safety.

Members of the Working Group had widely different opinions on the relevancy of data and conclusions included in many documents that were studied. This report describes the key issues of contention, and source documents so the State Fire Marshal can make an informed decision moving forward.

DRAFT

Appendix A- Assembly Bill 127 (Skinner, 2013) and additional Legislative Intent from the Assembly Journal

Assembly Bill No. 127
CHAPTER 579

An act to add Section 13108.1 to the Health and Safety Code, relating to fire safety.

[Approved by Governor October 05, 2013. Filed with Secretary of State October 05, 2013.]

LEGISLATIVE COUNSEL'S DIGEST

AB 127, Skinner. Fire safety: fire retardants: building insulation.

Existing law authorizes the State Energy Resources Conservation and Development Commission to adopt regulations pertaining to urea formaldehyde foam insulation materials that are reasonably necessary to protect the public health and safety. Existing law provides that these regulations may include prohibition of the manufacture, sale, or installation of this insulation. Existing law also authorizes the Bureau of Electronic and Appliance Repair, Home Furnishings, and Thermal Insulation to establish by regulation insulation material standards governing the quality of all insulation material sold or installed in the state.

The California Building Standards Law requires all state agencies that adopt or propose adoption of any building standard to submit the building standard to the California Building Standards Commission for approval or adoption. Existing law requires the commission to receive proposed building standards from state agencies for consideration in an 18-month code adoption cycle. Existing law requires the commission to adopt, approve, codify, update, and publish green building standards applicable to a particular occupancy, if no state agency has the authority or expertise to propose green building standards for those occupancies.

This bill would require the State Fire Marshal, in consultation with the Bureau of Electronic and Appliance Repair, Home Furnishings, and Thermal Insulation, to review the flammability standards for building insulation materials, including whether the flammability standards for some insulation materials can only be met with the addition of chemical flame retardants. The bill would require, if deemed appropriate by the State Fire Marshal

based on this review, the State Fire Marshal to, by July 1, 2015, propose for consideration by the commission updated insulation flammability standards that accomplish certain things, including maintaining overall building fire safety.

Bill Text
The people of the State of California do enact as follows:

SECTION 1.
The Legislature finds and declares that for some insulation materials, current insulation flammability standards can only be met using chemical flame retardants and that new standards proposed pursuant to this act may provide manufacturers with flexibility in meeting the flammability standards, with or without the addition of chemical flame retardants, and would be consistent with maintaining overall building fire safety.

SEC. 2.
Section 13108.1 is added to the Health and Safety Code, to read:

13108.1.
The State Fire Marshal, in consultation with the Bureau of Electronic and Appliance Repair, Home Furnishings, and Thermal Insulation, shall review the flammability standards for building insulation materials, including whether the flammability standards for some insulation materials can only be met with the addition of chemical flame retardants. Based on this review, and if the State Fire Marshal deems it appropriate, he or she shall, by July 1, 2015, propose for consideration by the California Building Standards Commission, to be adopted at the sole discretion of the commission, updated insulation flammability standards that accomplish both of the following:

(a) Maintain overall building fire safety.
(b) Ensure that there is adequate protection from fires that travel between walls and into confined areas, including crawl spaces and attics, for occupants of the building and any firefighters who may be in the building during a fire.

DRAFT

CALIFORNIA LEGISLATURE
2013–14 REGULAR SESSION
3370 ASSEMBLY JOURNAL Sept. 12, 2013

Legislative Intent—Assembly Bill No. 127

E. Dotson Wilson
Chief Clerk of the Assembly State Capitol,
Room 3196 Sacramento, California

Dear Mr. Wilson: Assembly Bill 127 requires the State Fire Marshal to review the flammability standards for building insulation materials and to propose new flammability standards. The phrase "review the flammability standards" should not imply that the State Fire Marshal must generate new data or research. Rather, my intent in drafting the bill is for the State Fire Marshal to rely on existing information related to building materials.

Sincerely,
NANCY SKINNER, Assembly Member Fifteenth District

DRAFT

Appendix B- SFM's Directions to the Working Group

Flammability Standards for Building Insulation Materials (AB 127) Working Group Meeting Notes – April 17, 2014

State Fire Marshal (SFM) Chief Tonya Hoover thanked all of the members for participating in the AB 127 Working Group, acknowledged the fact that it's an extremely time-consuming process and expressed her appreciation to the members for remaining on board because the topic is very important. Chief Hoover then assured the workgroup members that the letters that were written to SFM were all thoroughly read and discussed; she takes every comment and concern very seriously and wants to ensure that the process remains open and balanced. SFM is not giving any one entity or industry a special voice or consideration above or beyond any other entity or industry; this is an equal playing field. If there are twelve fire service personnel in the room, then they do not have twelve times the voice. Chief Hoover clarified that SFM's primary interest is in fire and panic safety; she wants to ensure that the necessary public safety requirements can be met. Any blog or publication that insinuates that SFM can be bought or funded in a manner that's contrary to the mission is false and Chief Hoover takes such statements personally. Chief Hoover hopes that all parties participating in this group will speak up about any topic that he/she thinks needs to be addressed, disclose their affiliation(s) and be a part of the discussions and information sharing process. She does not want anyone to sit in silence and then throw stones at each other for what the workgroup is trying to accomplish nor does she want the workgroup's efforts to be misinterpreted or misrepresented.

Chief Hoover stated that everybody can recognize that E84 is not the best test for all construction circumstances; construction techniques and products and fixed protection have evolved over the life of the code development. There could very well be other construction alternatives that provide the necessary level of fire safety without using E84 to determine if fire safety provisions will be met. Chief Hoover requested that the workgroup develop the recommended alternatives to achieve the needed fire safety which could include construction methods that build assemblies with barriers, fixed protection systems and/or the limited introduction of items in areas such as walls, floors and ceilings and ceiling openings to limit the introduction of air, fire and smoke into those spaces. Chief Hoover is looking for alternatives to E84; it does not have to be used/mandated- what are the alternatives? There may be a need to perform some assembly testing to draw some conclusions that could be recognized in the code as alternatives. California has the ability to create alternatives; the workgroup is comprised of

DRAFT

scientists and PhD's who are the subject matter experts and know best. There could be a proposal to develop a more appropriate test; it's Chief Hoover's hope that the workgroup will include such a proposal in the recommendation report.

Chief Hoover received a letter from the bill's author that provides a complete explanation of her intent with a narrowed scope of direction and supports alternatives to E84 for the code. Also, SFM is trying to obtain funding for this project through the governor's budget process but will not know if it's approved until 7/1/14. Chief Hoover hopes that the request for funding will be included in the 2014-15 budget. Chief Hoover believes that SFM can stay focused on the mission of maintaining fire and panic safety while addressing possible acceptable alternatives for a modern construction world.

DRAFT

Appendix C- Letters to OSFM

Letter to OSFM from Assembly member Nancy Skinner?
Letter to OSFM from Senator Cathleen Galgiani?

DRAFT

Appendix D- Working Group's Pathway to Performance Standards Summery

Below is a summary of the meeting minutes that goes into detail on how the work group finally decided on performance standards.

29 January 2014 Meeting

The first in-person meeting of Working Group was on 29 January 2014. At this meeting, the Working Group reviewed the language of AB 127 and discussed the Legislative Intent of AB 127. At this meeting it was established by the OSFM that:

- Scope included all insulation materials
- Scope was not limited to building envelope/wall cavity insulation
- For purposes of discussion, 2013 CBC, CFC and CRC would serve as baseline guide for Fire Safety

25 February 2014 Meeting

The 25 February meeting included additional discussion regarding the intent of AB 127, with the OSFM highlighting:

- First intention is to maintain overall fire safety
- Second intention is to ensure adequate protection from fires traveling between walls and into confined spaces
- Intent is not to generate new data or research, but to work with what is already available

As a result of the 25 February meeting, the scope and focus changed. The OSFM suggested the Working Group should:

- Focus on insulation in exterior walls, attics, roofs and under floors
- Narrow the discussion to walls, attics, ceilings and floors
- Include insulations for sound or conditioned versus unconditioned space because the same materials are used for both purposes and have the same code requirements
- Narrow the scope of insulation materials to foam plastic insulations

20 March 2014 Meeting

Prior to the 20 March meeting, the OSFM received a letter, dated 19 March, from members of the Working Group and other parties. The content of the letter was relayed to the Working Group, indicating concerns related to the Working Group's understanding of the intent of AB 127. The letter further expressed disagreement with an assertion, as recorded in the 25 February meeting minutes, that the appropriateness and validity of ASTM E84 was not in question, that whether or not the test is 'flawed' was irrelevant and not a consideration in the context of the Working Group's deliberations.

DRAFT

The 20 March meeting involved a significant amount of discussion surrounding insulation materials, flame retardants and the ASTM E84 test along with its use; both application of the test and its validity and appropriateness, by the construction codes. This meeting initiated a long series of discussions and debates regarding the ASTM E84 test, fire testing (in general), 'real world' fires, the application of fire tests and testing by and within the code(s). Middle or common ground would prove elusive and much of the debate surrounded the belief that ASTM E84 is flawed, does not provide meaningful data regarding the performance of materials (specifically foam plastic insulations) in 'real world' fires and, therefore, a requirement to comply with ASTM E84 (Class II or Class I) is of limited value and results in the unnecessary use of Flame Retardants in order for products to comply. The contrary opinion was that ASTM E84 does provide meaningful data, is used by the code to evaluate a significant number of combustible materials and is just one part of a larger and more complex subject of fire testing, performance requirements and fire safety that is provided by the construction codes since the mid-1970s.

Later, the discussion shifted to toxicity of building materials and concerns of firefighters and first responders. These discussions were comparatively brief with the group somewhat agreeing that AB 127 was not focused on one or more specific flame retardants. The Working Group had earlier agreed that human toxicological issues were beyond the capabilities of the Working Group and that the scope and focus remained on flammability standards.

After much discussion, the group was left with the following:

- Currently, ASTM E84 is a 'baseline test' in use by the codes today and, in the absence of some alternative test, omitting it out is not an option
- If ASTM E84 is not the 'best' or 'correct' test to evaluate materials, then what would an alternative test look like?
- Toxicology and toxic effects were beyond the scope and expertise of the Working Group

17 April 2014 Meeting

The 17 April meeting started with Chief Hoover providing several specific, prepared comments regarding comments made in the public domain relative to the OSFM's leadership of the Working Group as well as having received a letter from Assemblymember Nancy Skinner, author of AB 127, containing a complete description of her intent and narrowed scope of direction in support of alternatives to the ASTM E 84. Some debate ensued regarding a perceived difference between Assemblymember Skinner's original intent for the law and how the law appeared in its final form. Debate regarding the 'validity'

and application of ASTM E84 continued as well as further discussion of the code requirements.

At the end of the 17 April meeting, based in no small part on comments by Chief Hoover and Chief Reinertson, the scope of the Work Group changed to:

- Developing compliance path, alternative to ASTM E84
- The concept of a "super assembly" was offered and initiated a discussion about assemblies and assembly tests as an alternative to ASTM E84
- Some amount of testing would likely be involved, so OSFM had made a request for additional funding

29 May 2014 Meeting

The 29 May meeting continued the discussion of the wall assembly test 'option' with respect to:

- Design considerations
- Acceptance criteria
- Tangential issues; e.g. fireblocking
- What materials to include in the proof-of-concept testing
- Some discussion of logistics issues relative to non-FR materials

By this time, the focus of the testing and scope of materials for the Work Group had effectively transitioned to foam plastic insulations only.

26 June 2014 Meeting

The 26 June meeting was devoted almost exclusively to further discussion around developing the specific details of the proposed assembly test(s); from products and materials, to configuration to acceptance criteria. No changes in scope or focus occurred.

24 July 2014 Meeting

The 24 July meeting, as with the previous meeting, was devoted almost exclusively to further discussion around developing the specific details of the proposed assembly test(s) and acceptance criteria.

Chief Hoovers Redirection

At the April 17, 2014 meeting of the Working Group, State Fire Marshal Tonya Hoover clarified that the primary interest of the Office of the State Fire Marshal is in fire and public safety. Her comments are transcribed in Appendix B.

Chief Hoover stated that:

DRAFT

- A letter from AB 127 author Assemblymember Nancy Skinner provided clarification of her intent, including a narrowed scope and support for alternatives to ASTM E84 in the California Building Standards Codes (Appendix C).
- The group can recognize that ASTM E84 is not the best test for all construction circumstances; construction techniques and products and fixed protection have evolved over the life of the building codes.
- There could very well be construction alternatives that provide necessary level of fire safety without requiring testing in accordance with ASTM E84.

Chief Hoover requested that the Working Group develop recommended alternative construction methods to testing by ASTM E84 that would achieve the needed fire safety. These could include: construction methods that build assemblies with barriers; fixed protection systems; the limited introduction of items in areas such as walls, floors and ceilings, and ceiling openings to limit the introduction of air, fire, and smoke into those spaces; or development of a more appropriate test. Chief Hoover asked for these alternatives, with the understanding that the alternatives do not have to be used or mandated.

Chief Hoover acknowledged that assembly testing may be needed to establish that the proposed alternatives maintain comparable safety to current code requirements.

DRAFT

Appendix E- Reference Standards

Fire Tests

ASTM E84 (or UL 723)- Standard Methods of Fire Tests for Evaluating Contribution of Wall and Ceiling Interior Finish to Room Fire Growth

ASTM E108 (or UL 790)- Standard Test Methods for Fire Tests of Roof Coverings

ASTM E119 (or UL 263)- Standard Test Methods for Fire Tests of Building Construction and Materials

ASTM E970- Standard Test Method for Critical Radiant Flux of Exposed Attic Floor Insulation Using a Radiant Heat Energy Source

ASTM D2863- Standard Test Method for Measuring the Minimum Oxygen Concentration to Support Candle-Like Combustion of Plastics (Oxygen Index)

ICC AC12- Foam Plastic Insulation (Appendix B or E)

ICC AC377- Spray-applied Foam Plastic Insulation (Appendix X)

ISO 9705- Fire tests -- Full-scale room test for surface products

NFPA 259- Standard Test Method for Potential Heat of Building Materials

NFPA 268- Standard Test Method for Determining Ignitability of Exterior Wall Assemblies Using a Radiant Heat Energy Source

NFPA 285- Standard Fire Test Method for Evaluation of Fire Propagation Characteristics of Exterior Non-Load-Bearing Wall Assemblies Containing Combustible Components

NFPA 286- Standard Methods of Fire Tests for Evaluating Contribution of Wall and Ceiling Interior Finish to Room Fire Growth

Material Specifications

ASTM C578- Standard Specification for Rigid, Cellular Polystyrene Thermal Insulation

DRAFT

ASTM C591- Standard Specification for Unfaced Preformed Rigid Cellular Polyisocyanurate Thermal Insulation

ASTM C1029 Standard Specification for Spray-Applied Rigid Cellular Polyurethane Thermal Insulation

ASTM C1289- Standard Specification for Faced Rigid Cellular Polyisocyanurate Thermal Insulation Board

DRAFT

Appendix F- Building Code Requirements for Foam Plastic Insulation

February 19, 2014

California Fire Tests for Insulation:
2013 California Building Code (CBC)

2013 CBC: Chapter 7, Section 720 Thermal and Sound-Insulating Materials

Products	Insulating materials, fiberglass, mineral wool, cellulose, including facings and all layers of single and multilayer reflective foil insulation (except Foam insulation shall comply with Chapter 26, and Single and Multilayer reflective plastic core insulation shall comply with Section 2613)
Uses	Wall, roof, ceiling, attic, crawl spaces
Fire test requirements -applicability	Nationwide applicability: California Codes are based on the International Code Council (ICC) model codes: IBC, IRC
Concealed installation	Except cellulose, Flame spread index and smoke developed index (720.2) Flame Spread Index <25/Smoke-developed Index <450 • ASTM E84 -09 Test Method for Surface Burning Characteristics of Building Materials, or • UL723 -08 Standard for Test for Surface Burning Characteristics of Building Materials – Facings are exempt from the flame spread and smoke developed index if they are in contact with the unexposed surface of the ceiling, wall, or floor finish. Cellulose – no limit on flame spread but must comply with <450 smoke-developed index AND (720.6) • CPSC 16 CFR Part 1209 (??? edition) Interim Safety Standard for Cellulose Insulation, AND • CPSC 16 CFR Part 1404 (??? edition) Cellulose Insulation
Exposed installation	Flame spread index and smoke developed index (720.3) Flame Spread Index <25/Smoke-developed Index <450 • ASTM E84 -09 Test Method for Surface Burning Characteristics of

DRAFT

	Building Materials, or • UL723 -08 Standard for Test for Surface Burning Characteristics of Building Materials – (Except cellulose that is not spray applied, only the smoke developed index of <450 applies.) On Attic floors (720.3.1): • ASTM E970 – 08A Test Method for Critical Radiant Flux of Exposed Attic Floor Insulation Using a Radiant Heat Energy Source
Loose fill insulation	For materials that cannot be mounted in the E84 apparatus, Flame spread index and smoke developed index (720.4) Flame Spread Index <25/Smoke-developed Index <450 • CAN/ULC S102.2 - 1988 Standard Method of Test for Surface Burning Characteristics of Flooring, Floor Coverings and Miscellaneous Materials and Assemblies – with 2000 Revisions Except cellulose, which complies with the details in concealed or exposed applications AND the CPSC requirements in Section 720.6.

Chapter 26 Plastics, Section 2603 Foam Plastic Insulation
Applies to all types of foam insulation: Extruded Polystyrene (XPS), Expanded Polystyrene (EPS), Rigid Polyurethane (PUR), Polyisocyanurate (PIR), Spray Polyurethane Foam (SPF)

Products	XPS, EPS, PU, PIR, SPF
Uses	Walls, roofs, crawl spaces, attics, below grade, exposed commercial interiors, coolers, freezers, entry doors, garage doors, metal panels, Exterior Insulation Finish Systems (EIFS), metal panels
Fire test requirements -applicability	Nationwide applicability: California Codes are based on the ICC model codes: IBC, IRC
Basic fire test	Flame spread index and smoke developed index (2603.3) Flame Spread Index <75/Smoke-developed Index <450 • ASTM E84 -07 Test Method for Surface Burning Characteristics of Building Materials, or • UL723 -03 Standard for Test for Surface Burning Characteristics of Building Materials – with Revisions through May 2005 ASTM E84 or UL 723 is also used as quality control for the labeling requirements in Section 2603.2 of the 2013 CBC ASTM E84 or UL 723 is also referenced in 2603.4.1.13 Walk in coolers, and 2603.5.4 Foam used on exterior walls in Type I, II, III, IV construction of any height – here the

DRAFT

	foam Flame spread index is limited to 25 or less and smoke –developed index is <450)
In addition to ASTM E84, additional fire tests or prescriptive installation details are required for specific uses of foam insulation:	Foam roof insulation – Exterior flame spread (2603.6): • ASTM E108 – 07a – Test Methods for Fire Tests of Roof Coverings or • UL790 – 04 Standard Test Methods for Fire Tests of Roof Coverings –with revisions through October 2008 Foam roof insulation – Interior (under steel deck) flame spread – fuel contribution (2603.3 – Exception3, 2603.4.1.5): • ANSI/FM 4450 (1989) Approval Standard for Class 1 Insulated Steel Deck Roofs – with Supplements through July of 1992 or • UL 1256 – 02 Fire Test of Roof Deck Construction – with Revisions through January 2007 Wall, roof/ceiling, floor/ceiling assemblies containing foam insulation – hourly fire resistance ratings (2603.5.1 if required for Exterior walls of Type I, II, III, IV of any height) • ASTM E119 -08a – Test Methods for Fire Tests of Building Construction and Materials or • UL263 – 03 Standard for Fire Test of Building Construction and Materials - with Revisions through October 2007 Garage Doors with foam insulation (2603.4.1.9) • DASMA 107 – 1997 (R2004) Room Fire Test for Garage Doors Using Foam Plastic Insulation (garage doors) Siding backer board (2603.4.1.10) Potential Heat • NFPA 259 – 13 Test Method for Potential Heat of Building Materials One Story Exterior Walls: Flame Spread Index <25; Smoke-developed Index <450 (2603.4.1.4) and Exterior walls of Type I, II, III, IV of any height: Flame Spread Index <25; Smoke-developed Index <450 (2603.5.4); • ASTM E84 -07 Test Method for Surface Burning Characteristics of Building Materials, or • UL723 -03 Standard for Test for Surface Burning Characteristics of Building Materials – with Revisions through May 2005 Exterior walls Type I, II, III, IV over 1 story - Potential Heat (2603.5.3) • NFPA 259 – 13 Test Method for Potential Heat of Building Materials

DRAFT

	Exterior Walls Type I, II, III, IV of any height - Ignitability (2603.5.7) • NFPA 268 – 12 – Standard Test Method for Determining Ignitability of Exterior Wall Assemblies Using A Radiant Heat Source Exterior Walls Type I, II, III IV of any height - Vertical and lateral flame propagation – (2603.5.5) • NFPA 285 – 11 Standard Method of Test for the Evaluation of the Flammability Characteristics of Exterior Nonload-bearing Wall Assemblies Containing Combustible Components Special approvals (2603.10), test must reflect actual end use configuration; typically used to qualify exposed interior wall/ceiling finish, elimination of ignition barriers for attics, crawl spaces, etc. • NFPA 286 – 11 Standard Method of Test for Evaluating Contribution of Wall and Ceiling Interior Finish to Room Fire Growth (includes specific acceptance criteria) • ANSI/FM4880 – 05 American National Standard for Evaluating Insulated Wall or Wall and Roof/Ceiling Assemblies, Plastic Interior Finish Materials, Plastic Exterior Building Panels, Wall/Ceiling Coating Systems, Interior and Exterior Finish Systems (exposed foam in interior walls, also various assemblies as described, elimination of the thermal barrier), or • UL 1040 - 96 Fire Test of Insulated Wall Construction – with Revisions through September 2007 (2603.4, 2603.9 – exposed foam in interior walls, elimination of the thermal barrier), or • UL 1715-97 – Fire Test of Interior Finish Material – with Revisions through April 2008 (2603.4, 2603.9, exposed foam on interior walls)

Chapter 26 Plastics, Section 2613 Reflective Plastic Core Insulation

Products	Reflective Plastic Core Insulation
Uses	Walls, roofs, crawl spaces, attics, exposed commercial interiors, coolers, freezers
Fire test requirements -applicability	Nationwide applicability: California Codes are based on the ICC model codes: IBC, IRC
Basic fire test	Flame spread index and smoke developed index (2613.3) Flame Spread Index <25/Smoke-developed Index <450 • ASTM E84 -09 Test Method for Surface Burning Characteristics of Building Materials, or

DRAFT

	• UL723 -03 Standard for Test for Surface Burning Characteristics of Building Materials – with Revisions through May 2005
In addition to ASTM E84, if exposed	• NFPA 286 – 11 Standard Method of Test for Evaluating Contribution of Wall and Ceiling Interior Finish to Room Fire Growth (includes specific acceptance criteria in 803.1.2.1) • UL 1715-97 – Fire Test of Interior Finish Material – with Revisions through March 2004 (2603.4, 2603.9, exposed foam on interior walls)

DRAFT

Appendix G- Proposed Performance Tests

Wall Assemblies

Chapter 12-7-6

TESTING AND EVALUATION OF BUILDING INSULATIONS WITHOUT FLAME RETARDANTS

Wall Assemblies

SFM Standard 12-7-6

12-7-6.1 Scope. This standard provides the test criteria needed for the State Fire Marshal to determine if a candidate wall assembly constructed with building insulation that does not meet the flame spread index and smoke developed index requirements of the California Residential Code §R302.10 (based on ASTM E84 testing) provides an equivalent level of fire safety as an identical baseline wall assembly using California Residential Code §R302.10 compliant insulation. This standard is only applicable for wall assemblies used in one-and-two family dwellings of Type VB construction.

12-7-6.2 Testing agencies. Testing of the candidate and baseline assemblies shall be performed by a State Fire Marshal Approved Testing Laboratory that is accredited for conducting the tests described in this standard. Test results shall be documented in a test report as described in this standard.

12-7-6.3 Insulation – The insulation to be evaluated as part of the test shall be installed in the same fashion in both the baseline wall assembly and the candidate wall assembly. Insulation for both assemblies shall be of the same type (sheet, spray applied, batt), installed thickness, and comparable physical features including density, R-value and cell structure. When a Candidate Wall Assembly does not have a comparative building insulation that closely matches its chemical, physical, and form properties, the California Fire Marshal shall be permitted to approve an alternate building insulation for comparison.

Foam plastics in the baseline wall assembly shall have a flame spread index ≤ 75 and a smoke-developed index ≤ 450 when tested in accordance with the requirements of California Residential Code §R302.10 (based on ASTM E84 testing). Foam plastics within the candidate wall assembly shall not be required to be tested to ASTM E84.

12-7-6.4 Approval. Parties wishing to have candidate wall assemblies approved by the State Fire Marshal shall provide the complete test report, including construction diagrams, to the State Fire Marshal Building Materials Listing (BML) program for consideration. Based on the information provided, the State Fire Marshal shall approve candidate assemblies judged to provide an equivalent level of fire safety as baseline assemblies. Approved designs, with construction diagrams, shall be documented with the BML program listings.

12-7-6.5 Alternate materials and methods. The State Fire Marshal shall be permitted to authorize construction changes to candidate wall assemblies as follows:

1. The baseline assembly and candidate assembly match the Part A test assembly described below, except for small deviations in the candidate assembly that have been approved.
2. The candidate assembly is so different that a new baseline assembly is needed. The State Fire Marshal shall be permitted to evaluate candidate assemblies other than those described in this standard provided they are tested against a baseline wall assembly judged equivalent by the State Fire Marshal, which includes construction that complies with all applicable requirements in the California Residential Code.

12-7-6.6 Additional Construction Features. When a candidate wall assembly requires additional construction features, as compared to the baseline wall assembly, to comply with the tests in this standard, these shall be specifically identified as additional required construction features in the test report.

12-7-6.7 Referenced documents. The following standards shall be used to evaluate candidate and baseline wall assemblies.

ASTM E119- Standard Test Methods for Fire Tests of Building Construction and Materials or **UL 263**- Fire Tests of Building Construction and Materials

NFPA 286- Standard Methods of Fire Tests for Evaluating Contribution of Wall and Ceiling Interior Finish to Room Fire Growth

12-7-6.8 Definitions.

1. **Baseline Wall Assembly.** A basic Load Bearing Non-Fire-Resistance-Rated Wall Assembly containing insulation that complies with the flame spread index and smoke developed index requirements of the California Residential Code §R302.10 (based on ASTM E84 testing).

2. **Candidate Wall Assembly.** A basic Load Bearing Non-Fire-Resistance-Rated Wall Assembly similar to the Baseline Wall Assembly but that contains insulation that does not meet the flame spread index and smoke developed index requirements of the California Residential Code §R302.10 (based on ASTM E84 testing).
3. **Fire Resistance Rating.** A measure of the elapsed time during which a material, product, or assembly continues to exhibit fire resistance under specified exposure conditions.
4. **Fire Resistance Test.** Test assessing the ability of a material, product, or assembly to withstand fire or give protection from it for a period of time.
5. **Flashover.** The rapid transition to a state of total surface involvement in a fire of combustible materials within an enclosure.
6. **Heat Release Rate.** The thermal energy released per unit time by an item during combustion under specified conditions.
7. **Reaction to Fire Test.** Test assessing the response of a material, product, or assembly in contributing by its own decomposition to a fire to which it is exposed, under specified conditions.
8. **Wall Assembly**. All components, methods, and dimensions used to construct wall.

12-7-6.9 Part A Fire Resistance Test- Baseline Wall Assembly – Cavity Insulation.

1. **Wall Size**. The area exposed to fire shall be not less than 100 ft^2, with neither dimension less than 9 ft (Section 8.2.1 of ASTM E119). The test specimen shall be a vertical assembly that is not restrained on its vertical edges.
2. **Wall Construction**

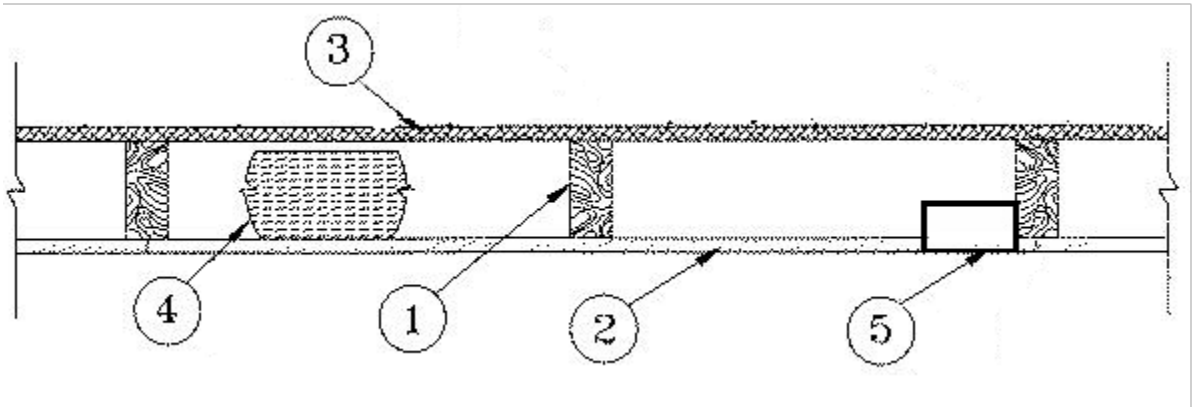

1) Wood Studs — Nom 2 by 4 in. spaced 16 in. OC.
2) Gypsum Board — 1/2 in. thick 4 by 8 ft. paper faced gypsum board, applied horizontally with vertical joints centered over studs. Horizontal joints need not be backed by framing. Fastened

to studs and plates with 1-7/8 in. long Type S screws spaced 8 in. OC, Joints covered with joint compound and paper tape.

3) Sheathing — 15/32 in. thick, 4 ft. wide, OSB sheathing, applied vertically, with vertical joints centered over studs. Attached to studs with 10d galvanized nails 6 in. OC at the perimeter and 12 in. OC in the field.
4) Insulation– Insulation to be evaluated as part of the test, installed in the same fashion for both baseline wall assembly and the candidate wall assembly. Insulation for both assemblies shall be of the same type (board stock or spray applied), installed thickness, and comparable chemical and physical features including density, R-value and cell structure. Installed per manufacturer's recommended installation procedures to fill the voids between the wood studs to the desired depth.
5) Nonmetallic electrical boxes – Two double gang listed "new construction" nonmetallic electrical boxes, nominal 4 in. by 4 in., 32 cubic in., Listed or Classified 2 hour "W". Securely attached with the two nails provided to the inside surface of the third wood studs from the side of the test assembly, with all side and back knockouts in place. Installed flush with the gypsum board, with a 1/8 inch annular opening around the perimeter of the box. Bottom of one box 18 inches above the floor, bottom of the second box 48 inches above the floor. Two listed duplex receptacles installed in the bottom box, two listed SPST switches installed in the upper box. Terminals on each device loop wired in the wall cavity with 18 in., 12/3 Type NM cable, grounding conductors secured to the integral grounding lug. Standard size listed nonmetallic cover plates secured over each box with the screws provided.
6) Load-Bearing- During the fire resistance test, a superimposed load is to be applied to the specimen. The applied load shall be 1146 lbs./stud when the wall is 9 ft. high or 941 lbs./stud when the wall is 10 ft. high.

12-7-6.10 Part A Fire Resistance Test- Baseline Wall Assembly – Exterior Insulation.

1. Wall Size. The area exposed to fire shall be not less than 100 ft^2, with neither dimension less than 9 ft (Section 8.2.1 of ASTM E119). The test specimen shall be a vertical assembly that is not restrained on its vertical edges.
2. **Wall Construction**

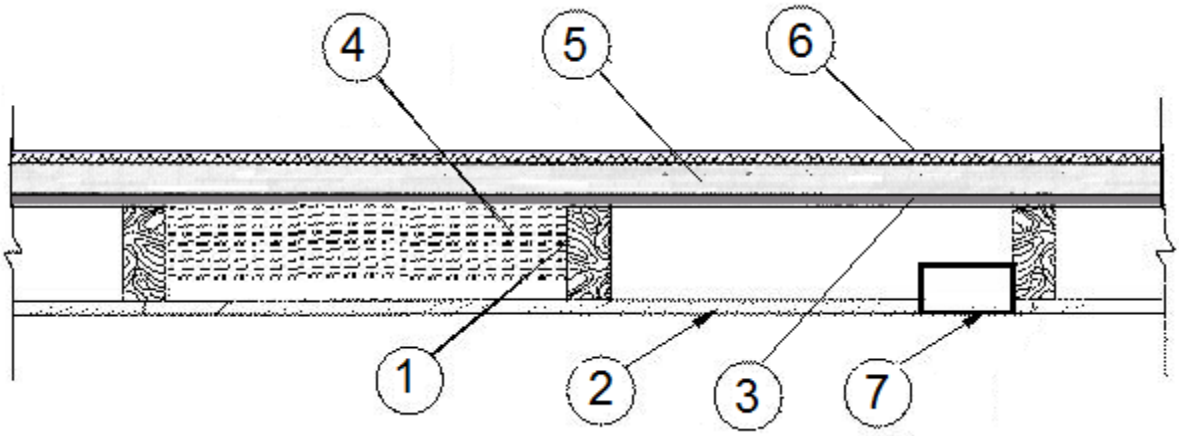

1) Wood Studs — Nom 2 by 4 in. spaced 16 in. OC.
2) Gypsum Board — 1/2 in. thick 4 by 8 ft. paper faced gypsum board, applied horizontally with vertical joints centered over studs. Horizontal joints need not be backed by framing. Fastened to studs and plates with 1-7/8 in. long Type S screws spaced 8 in. OC, Joints covered with joint compound and paper tape.
3) Sheathing — 15/32 in. thick, 4 ft. wide, OSB sheathing, applied vertically, with vertical joints centered over studs. Attached to studs on exterior side of wall with 1-1/2 in. long galvanized roofing nails spaced 6 in. OC at perimeter of panels and 12 in. OC along interior studs..
4) Cavity Insulation– Insulation to be evaluated as part of the test, installed in the same fashion for both baseline wall assembly and the candidate wall assembly. Insulation for both assemblies shall be of the same type (board stock or spray applied), installed thickness, and comparable chemical and physical features including density, R-value and cell structure. Installed per manufacturer's instructions.
5) Continuous Insulation– Insulation to be evaluated as part of the test, installed in the same fashion for both baseline wall assembly and the candidate wall assembly. Insulation for both assemblies shall be of the same type (board stock or spray applied), installed thickness, and comparable chemical and physical features including density, R-value and cell structure. Installed to the sheathing in accordance with the manufacturer's instructions. Installed in the maximum thickness anticipated for approval.
6) Wood siding — Nominal 3/8 in. by 4 ft. by 8 ft. plywood siding. Attached to studs with galvanized fasteners spaced 6 in. OC at the perimeter and 12 in. OC in the field. Length of the fasteners shall be 1-1/2 in. plus the thickness of the insulation specified in item (4).

DRAFT

7) Nonmetallic electrical boxes – Two double gang listed "new construction" nonmetallic electrical boxes, nominal 4 in. by 4 in., 32 cubic in., Listed or Classified 2 hour "W". Securely attached with the two nails provided to the inside surface of the third wood studs from the side of the test assembly, with all side and back knockouts in place. Installed flush with the gypsum board, with a 1/8 inch annular opening around the perimeter of the box. Bottom of one box 18 inches above the floor, bottom of the second box 48 inches above the floor. Two listed duplex receptacles installed in the bottom box, two listed SPST switches installed in the upper box. Terminals on each device loop wired in the wall cavity with 18 in., 12/3 Type NM cable, grounding conductors secured to the integral grounding lug. Standard size listed nonmetallic cover plates secured over each box with the screws provided.

3. Load-Bearing- During the fire resistance test a superimposed load is to be applied to the specimen. The applied load shall be 1146 lbs/stud when the wall is 9 ft. high or 941 lbs/stud when the wall is 10 ft. high.

12-7-6.11 PART A. Fire Resistance Test.

12-7-6.11.1 Required Test Method. ASTM E119 or UL 263 shall be utilized to compare the baseline wall assembly to the candidate wall assembly.

1. Test shall be performed from the interior side
2. The test shall be run until load failure. (ASTM E119 Section 8.2.4)
3. Time to load failure shall be the time at which the test specimen ceases to sustain the applied load (ASTM E119, section 8.2.4.1).
4. Time to passage of flame failure shall be the time at which either flame or hot gases appear on the unexposed side and are hot enough to ignite cotton waste.
5. Time to transmission of heat failure shall be the time at which heat transmission through the wall during the test raises the temperature on the unexposed wall surface more than 250°F (139°C) above its initial temperature (ASTM E119, section 8.2.4.3).
6. The Hose Stream Test shall not be required. (ASTM E119 § Section 7.6)

12-7-6.11.2 Part A Test Report. The test report shall include the following:

1. Test Assemblies.
   a. A complete description of both the baseline wall assembly, and the candidate wall assembly, including construction diagrams. This shall include the description of any voids.

b. ASTM E84 test results for the insulation used in the baseline wall assembly and, if tested, the candidate wall assembly.
c. Description of the thickness and physical characteristics of the insulation used in the baseline wall assembly and the candidate wall assembly as required by Section 12-7-6.3.
d. For exterior insulated wall assemblies the report shall indicated if the wall was tested from the exterior side.
e. Description of any additional construction features provided on the candidate assembly as compared to the baseline assembly.

2. Test Results.
   a. Test results shall include all information required by ASTM E119 or UL 263, and include the time to failure for the passage of flame criterion, the time to failure for the heat transmission criterion (ASTM E119 Section 8.2.4.3), and the time to failure for the load criterion (ASTM E119 Section 8.2.4.1).

12-7-6.11.3 Conditions of Acceptance. The candidate wall assembly shall meet and/or exceed the performance of the baseline wall assembly in regards to the time to failure in the passage of flame performance, the heat transfer performance, and the load performance (ASTM E119 Section 8.2.4).

12-7-6.12 PART B. Room Corner Test.

12-7-6.12.1 Required Test Method. A modified NFPA 286 test shall be utilized to compare the baseline wall assembly to the Candidate wall assembly.

1. NFPA 286 Test shall be run for 5 minutes at 40 kW, and for an extended period at 160 kW, see Item 2.
2. The test shall be run until flashover occurs.
3. A standard NFPA 286 room shall be used, based on the assemblies used in Part A Fire Resistance Test. Three (3) walls and one (1) ceiling shall be constructed with the materials to be tested.

12-7-6.12.2 Part B Test Report. The test report shall include the following:

1. Test Assemblies.
   a. A complete description of both the baseline wall assembly, and the candidate wall assembly, including construction diagrams.
   b. ASTM E84 test results for the insulation used in the baseline wall assembly and if tested, the candidate wall assembly.
   c. Description of the thickness and physical characteristics of the insulation used in the baseline wall assembly and the candidate wall assembly as required by Section 12-7-6.3.

d. Description of any additional construction features provided on the candidate assembly as compared to the baseline assembly.

2. Test Results.
   a. Time to flashover, as defined in NFPA 286 (and report the criteria used to determine flashover)
   b. Time to a heat release rate exceeding 800 kW,
   c. Time to a total smoke released exceeding 1,000 m^2,
   d. Time at which flames spread to the outer extremity of the test specimen on any wall or ceiling and
   e. Visual observations concerning the involvement of the foam plastic insulation during the test.

12-7-6.12.3 Conditions of Acceptance. The candidate wall assembly shall meet and/or exceed the performance of the baseline wall assembly in regards to the following criteria:

1. Time to flashover, as defined in NFPA 286,
2. Time to a heat release rate exceeding 800 kW,
3. Time for a total smoke released exceeding 1,000 m^2, and
4. Time for flames to spread to the outer extremity of the test specimen on any wall or ceiling.

DRAFT

Chapter 12-7-7

TESTING AND EVALUATION OF BUILDING INSULATIONS WITHOUT FLAME RETARDANTS

Floor-Ceiling Assemblies

SFM Standard 12-7-7

12-7-7.1 Scope. This standard provides the test criteria needed for the State Fire Marshal to determine if a candidate floor-ceiling assembly constructed with building insulation that does not meet the flame spread index and smoke developed index requirements of the California Residential Code §R302.10 (based on ASTM E84 testing) provides an equivalent level of fire safety as an identical baseline floor-ceiling assembly using California Residential Code §R302.10 compliant insulation. This standard is only applicable for floor-ceiling assemblies used in one-and-two family dwellings of Type VB construction.

12-7-7.2 Testing agencies. Testing of the candidate and baseline assemblies shall be performed by a State Fire Marshal Approved Testing Laboratory that is accredited for conducting the tests described in this standard. Test results shall be documented in a test report as described in this standard.

12-7-7.3 Insulation – The insulation to be evaluated as part of the test shall be installed in the same fashion in both the baseline floor-ceiling assembly and the candidate floor-ceiling assembly. Insulation for both assemblies shall be of the same type (sheet, spray applied, batt), installed thickness, and comparable physical features including density, R-value and cell structure. When a Candidate Floor-ceiling Assembly does not have a comparative building insulation that closely matches its chemical, physical, and form properties, the California Fire Marshal shall be permitted to approve an alternate building insulation for comparison.

Foam plastics in the baseline floor-ceiling assembly shall have a flame spread index ≤ 75 and a smoke-developed index ≤ 450 when tested in accordance with the requirements of California Residential Code §R302.10 (based on ASTM E84 testing). Foam plastics within the candidate floor-ceiling assembly shall not be required to be tested to ASTM E84.

12-7-7.4 Approval. Parties wishing to have candidate floor-ceiling assemblies approved by the State Fire Marshal shall provide the complete test report, including construction diagrams, to the State Fire Marshal Building Materials Listing (BML) program for consideration. Based on the information provided, the State Fire Marshal shall approve candidate assemblies judged to provide an equivalent level of fire safety as baseline assemblies. Approved designs, with construction diagrams, shall be documented with the BML program listings.

12-7-7.5 Alternate materials and methods. The State Fire Marshal shall be permitted to authorize construction changes to candidate floor-ceiling assemblies as follows:

1. The baseline assembly and candidate assembly match the Part A test assembly described below, except for small deviations in the candidate assembly that have been approved.
2. The candidate assembly is so different that a new baseline assembly is needed. The State Fire Marshal shall be permitted to evaluate candidate assemblies other than those described in this standard provided they are tested against a baseline floor-ceiling assembly judged equivalent by the State Fire Marshal, which includes construction that complies with all applicable requirements in the California Residential Code.

12-7-7.6 Additional Construction Features. When a candidate floor-ceiling assembly requires additional construction features, as compared to the baseline floor-ceiling assembly, to comply with the tests in this standard, these shall be specifically identified as additional required construction features in the test report.

12-7-7.7 Referenced document.

ASTM E119- Standard Test Methods for Fire Tests of Building Construction and Materials or **UL 263**- Fire Tests of Building Construction and Materials

NFPA 286- Standard Methods of Fire Tests for Evaluating Contribution of Wall and Ceiling Interior Finish to Room Fire Growth

12-7-7.8 Definitions.

1. **Baseline Floor-Ceiling Assembly.** A basic Floor-Ceiling Assembly containing insulation that complies with the flame spread index and smoke developed index requirements of the California Residential Code §R302.10 (based on ASTM E84 testing).
2. **Candidate Floor-Ceiling Assembly.** A Floor-Ceiling assembly similar to the Baseline Floor-Ceiling Assembly but that contains insulation that

does not meet the flame spread index and smoke developed index requirements of the California Residential Code §R302.10.

3. **Fire Resistance Rating.** A measure of the elapsed time during which a material, product, or assembly continues to exhibit fire resistance under specified exposure conditions.
4. **Fire Resistance Test.** Test assessing the ability of a material, product, or assembly to withstand fire or give protection from it for a period of time.
5. **Flashover.** The rapid transition to a state of total surface involvement in a fire of combustible materials within an enclosure.
6. **Heat Release Rate.** The thermal energy released per unit time by an item during combustion under specified conditions.
7. **Reaction to Fire Test.** Test assessing the response of a material, product, or assembly in contributing by its own decomposition to a fire to which it is exposed, under specified conditions.
8. **Floor-Ceiling Assembly**. All components, methods, and dimensions used to construct Floor-Ceiling. This assembly is typically found between a garage and the inhabited space or between the exterior overhang of the home and inhabited space.

12-7-7.9 Part A Fire Resistance Test: Baseline Floor-Ceiling Assembly.

1. **Floor Size**. The area exposed to fire shall be not less than 180 ft^2, with neither dimension less than 12 ft. The test specimen shall not be restrained on its vertical edges.
2. **Floor-Ceiling Assembly Construction**

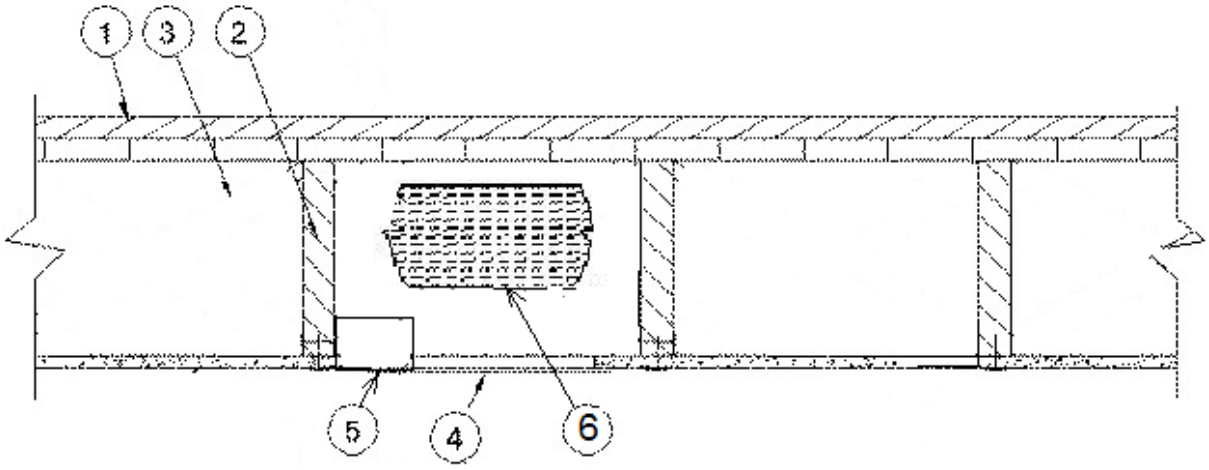

1) **Flooring Systems —** The flooring system shall consist of the following:
   i. **Finish flooring** – Minimum 19/32 in. thick wood structural panels, min grade "Underlayment" or "Single Floor". Face grain of plywood or strength axis of panels to be

perpendicular to joists with joints staggered. Attached with 1-1/4 in. long galvanized nails spaced 8 in. OC around the perimeter. **Vapor barrier** — Commercial rosin-sized building paper 0.010 in. thick.

ii. **Subflooring** — 15/32 in. thick plywood wood structural panels min. grade "C-D". Face grain of plywood to be perpendicular to joists with joints staggered. Attached with 1-1/4 in. long galvanized nails spaced 8 in. OC to the floor joists.

2) **Wood joists** – Nominal 2 by 10 in., spaced 16 in. OC, firestopped
3) **Mid-span blocking** (not shown) - Nominal 2 by 10 in lumber secured between wood joists at the middle of the span, with four "toe nailed" 3-1/2 in. 16D galvanized steel nails.
4) **Gypsum board** – Nom 1/2 in. thick, 4 ft. wide gypsum board installed with long dimension perpendicular to joists and secured with 1-5/8 in. long, 5d cement coated nails spaced 6 in. OC. Nails spaced 3/4 and 1/2 in. from side and end joints. .
5) **Nonmetallic electrical boxes** – Two Round, listed "new construction" nonmetallic ceiling electrical boxes, nominal 18 cubic in., Listed or Classified 2 hour "C". Securely attached with the two nails provided to the inside surface of the third wood joists from the side of the test assembly. Installed flush with the gypsum board, with a 1/8 inch annular opening around the perimeter of the box. Each box includes splices for a single looped 12/3 Type NM cable, connections made with listed twist on wire connectors, grounding conductors secured to the integral grounding lug. Standard nonmetallic cover plates secured over each box with the screws provided.
6) **Insulation** – Insulation to be evaluated as part of the test, installed in the same fashion for both base line floor-ceiling assembly and the candidate assembly. Insulation for both assemblies shall be of the same type (board stock or spray applied), installed thickness, and comparable chemical and physical features including density, R-value and cell structure. Installed to fill the voids between the wood joists in accordance with the manufacturer's instructions. Installed in the maximum thickness anticipated for approval.

3. **Load-Bearing**- Floor to be tested with an applied load of 60 lbs./ft^2

12-7-7.10 Required Test Method. ASTM E119 or UL 263 shall be utilized to compare the baseline wall assembly to the candidate wall assembly.

1. Test shall be performed from the interior side
2. The test shall be run until load failure. (ASTM E119 Section 8.2.4)

3. Time to load failure shall be the time at which the test specimen ceases to sustain the applied load (ASTM E119, section 8.2.4.1).
4. Time to passage of flame failure shall be the time at which either flame or hot gases appear on the unexposed side and are hot enough to ignite cotton waste.
5. Time to transmission of heat failure shall be the time at which heat transmission through the wall during the test raises the temperature on the unexposed wall surface more than 250°F (139°C) above its initial temperature (ASTM E119, section 8.2.4.3).
6. The Hose Stream Test shall not be required. (ASTM E119 § Section 7.6)

12-7-7.11 Part A Test Report. The test report shall include the following:

1. Test Assemblies.
   a. A complete description of both the baseline floor-ceiling assembly, and the candidate floor-ceiling assembly, including construction diagrams. This shall include the description of any voids.
   b. ASTM E84 test results for the insulation used in the baseline floor-ceiling assembly and, if tested, the candidate floor-ceiling assembly.
   c. Description of the thickness and physical characteristics of the insulation used in the baseline floor-ceiling assembly and the candidate floor-ceiling assembly as required by Section 12-7-7.3.
   d. Description of any additional construction features provided on the candidate assembly as compared to the baseline assembly.
2. Test Results.
   a. Test results shall include all information required by ASTM E119 or UL 263, and include the time to failure for the passage of flame criterion, the time to failure for the heat transmission criterion (ASTM E119 Section 8.2.4.3), and the time to failure for the load criterion (ASTM E119 Section 8.2.4.1).

12-7-7.12 Conditions of Acceptance. The candidate floor-ceiling assembly shall meet and/or exceed the performance of the baseline floor-ceiling assembly in regards to the time to failure in the passage of flame performance, the heat transfer performance, and the load performance (ASTM E119 Section 8.2.4).

12-7-7.13 PART B. Room Corner Test.

12-7-7.13.1 Required Test Method. A modified NFPA 286 test shall be utilized to compare the baseline floor-ceiling assembly to the candidate floor-ceiling assembly.

1. NFPA 286 Test shall be run for 5 minutes at 40 kW, and for an extended period at 160 kW, see Item 2.
2. The test shall be run until flashover occurs.
3. A standard NFPA 286 room shall be used, based on the assembly used in Part A Fire Resistance Test. Three (3) walls and one (1) ceiling shall be lined with the materials to be tested.

12-7-7.13.2 Part B Test Report. The test report shall include the following:

1. Test Assemblies.
   a. A complete description of both the baseline floor-ceiling assembly, and the candidate floor-ceiling assembly, including construction diagrams.
   b. ASTM E84 test results for the insulation used in the baseline floor-ceiling assembly and the candidate floor-ceiling assembly.
   c. Description of the thickness and physical characteristics of the insulation used in the baseline floor-ceiling assembly and the candidate floor-ceiling assembly as required by Section 12-7-9.3.
   d. Description of any additional construction features provided on the candidate assembly as compared to the baseline assembly.
2. Test Results.
   a. Time to flashover, as defined in NFPA 286 (and report the criteria used to determine flashover)
   b. Time to a heat release rate exceeding 800 kW,
   c. Time to a total smoke released exceeding 1,000 m^2,
   d. Time at which flames spread to the outer extremity of the test specimen on any wall or ceiling and
   e. Visual observations concerning the involvement of the foam plastic insulation during the test.

12-7-7.13.3 Conditions of Acceptance. The candidate floor-ceiling assembly shall meet and/or exceed the performance of the baseline floor-ceiling assembly in regards to the following criteria:

1. Time to flashover, as defined in NFPA 286,
2. Time to a heat release rate exceeding 800 kW,
3. Time for a total smoke released exceeding 1,000 m^2, and
4. Time for flames to spread to the outer extremity of the test specimen on any wall or ceiling.

DRAFT

Chapter 12-7-8

TESTING AND EVALUATION OF BUILDING INSULATIONS WITHOUT FLAME RETARDANTS

Crawl Space Assemblies

SFM Standard 12-7-8

12-7-8.1 Scope. This standard provides the test criteria needed for the State Fire Marshal to determine if a candidate crawl space assembly constructed with building insulation that does not meet the flame spread index and smoke developed index requirements of the California Residential Code §R302.10 (based on ASTM E84 testing) provides an equivalent level of fire safety as an identical baseline crawl space assembly using California Residential Code §R302.10 compliant insulation. This standard is only applicable for crawl space assemblies used in one-and-two family dwellings of Type VB construction.

12-7-8.2 Testing agencies. Testing of the candidate and baseline assemblies shall be performed by a State Fire Marshal Approved Testing Laboratory that is accredited for conducting the tests described in this standard. Test results shall be documented in a test report as described in this standard.

12-7-8.3 Insulation – The insulation to be evaluated as part of the test shall be installed in the same fashion in both the baseline crawl space assembly and the candidate crawl space assembly. Insulation for both assemblies shall be of the same type (sheet, spray applied, batt), installed thickness, and comparable physical features including density, R-value and cell structure. When a Candidate Crawl space Assembly does not have a comparative building insulation that closely matches its chemical, physical, and form properties, the California Fire Marshal shall be permitted to approve an alternate building insulation for comparison.

Foam plastics in the baseline crawl space assembly shall have a flame spread index ≤ 75 and a smoke-developed index ≤ 450 when tested in accordance with the requirements of California Residential Code §R302.10 (based on ASTM E84 testing). Foam plastics within the candidate crawl space assembly shall not be required to be tested to ASTM E84.

12-7-8.4 Approval. Parties wishing to have candidate crawl space assemblies approved by the State Fire Marshal shall provide the complete test report, including construction diagrams, to the State Fire Marshal Building Materials Listing (BML) program for consideration. Based on the information provided, the State Fire Marshal shall approve candidate assemblies judged to provide an equivalent level of fire safety as baseline assemblies. Approved designs, with construction diagrams, shall be documented with the BML program listings.

12-7-8.5 Alternate materials and methods. The State Fire Marshal shall be permitted to authorize construction changes to candidate crawl space assemblies without additional testing, provided they are not judged to affect the fire performance of the candidate assembly as compared to the baseline assembly.

12-7-8.6 Additional Construction Features. When a candidate crawl space assembly requires additional construction features, as compared to the baseline crawl space assembly, to comply with the tests in this standard, these shall be specifically identified as additional required construction features in the test report.

12-7-8.7 Referenced documents. The following standards shall be used to evaluate candidate and baseline crawl space assemblies.

ICC ES Acceptance Criteria AC12 Foam Plastic Insulation, Appendix B (June 2012).

ICC-ES Acceptance Criteria AC377 Spray-applied Foam Plastic Insulation, Appendix X, (November 2012).

NFPA 286- Standard Methods of Fire Tests for Evaluating Contribution of Wall and Ceiling Interior Finish to Room Fire Growth

12-7-8.8 Definitions.

1. **Baseline Crawl Space Assembly.** A basic crawl space assembly containing insulation that complies with the flame spread index and smoke developed index requirements of the California Residential Code §R302.10 (based on ASTM E84 testing).
2. **Candidate Crawl Space Assembly.** A crawl space assembly similar to the baseline crawl space assembly but that contains insulation that does not meet the flame spread index and smoke developed index requirements of the California Residential Code §R302.10 (based on ASTM E84 testing).
3. **Crawl space**. A shallow, unfinished and unoccupied space of a one-and-two family dwellings located under the occupied floor where entry is made only for inspection and service of plumbing, HVAC, and wiring.

4. **Flashover.** The rapid transition to a state of total surface involvement in a fire of combustible materials within an enclosure.
5. **Heat Release Rate.** The thermal energy released per unit time by an item during combustion under specified conditions.
6. **Reaction to Fire Test.** Test assessing the response of a material, product, or assembly in contributing by its own decomposition to a fire to which it is exposed, under specified conditions.
7. **Crawl Space Assembly**. The building assembly directly above a crawl space, consisting of a floor construction, support joists and underfloor insulation.

12-7-8.9 Crawl Space Test Assemblies.

1. The baseline and candidate crawl space test assemblies shall be constructed according to ICC ES AC377 Appendix X or ICC ES AC12 Appendix B, as applicable.
2. The insulation shall be applied to completely fill the cavity spaces between the floor joists and be applied to the crawl spaces as described in AC377 or AC12, as applicable.
3. The interior surface of the baseline assembly shall consist of 3/8-inch thick, gypsum board.

12-7-8.10 Room Corner Test.

12-7-8.10.1 Required Test Method. The ICC ES AC12 or AC377 test shall be utilized to compare the baseline crawl space assembly to the candidate crawl space assembly, as modified below.

1. The test shall be run for 5 minutes at 40 kW, and for an extended period at 160 kW, see Item 2.
2. The test shall be run until flashover occurs.
3. A standard NFPA 286 room shall be used, based on the assembly above. Three (3) walls and one (1) ceiling shall be lined with the material to be tested.

12-7-8.10.2 Test Report. The test report shall include the following:

1. Test Assemblies.
   a. A complete description of both the baseline crawl space assembly, and the candidate crawl space assembly, including construction diagrams.
   b. ASTM E84 test results for the insulation used in the baseline crawl space assembly and, if tested, the candidate crawl space assembly.
   c. Description of the thickness and physical characteristics of the insulation used in the baseline crawl space assembly and the candidate crawl space assembly as required by Section 12-7-8.3.

d. Description of any additional construction features provided on the candidate assembly as compared to the baseline assembly.

2. Test Results.
   a. Time to flashover, as defined in NFPA 286 (and report the criteria used to determine flashover),
   b. Time to a heat release rate exceeding 800 kW,
   c. Time at which the heat flux to the floor exceeds 20 kW/m^2,
   d. Time at which the average upper layer temperature exceeds 600ºC,
   e. Time to a total smoke released exceeding 1,000 m^2,
   f. Time at which flames exit the doorway, and
   g. Visual observations concerning the involvement of the foam plastic insulation during the test.

12-7-8.10.3 Conditions of Acceptance. The candidate crawl space assembly shall meet and/or exceed the performance of the baseline crawl space assembly in regards to the following criteria:

1. Time to flashover, as defined in NFPA 286.
2. Time to heat release rate exceeding 800 kW
3. Time for the heat flux to the floor to exceed 20 kW/m^2
4. Time for the average upper layer temperature to exceed 600ºC
5. Time for a total smoke release exceeding 1,000 m^2
6. Time for flames to exit the doorway .

DRAFT

Chapter 12-7-9

TESTING AND EVALUATION OF BUILDING INSULATIONS WITHOUT FLAME RETARDANTS

Conditioned Attic Assemblies

SFM Standard 12-7-9

12-7-9.1 Scope. This standard provides the test criteria needed for the State Fire Marshal to determine if a candidate conditioned attic assembly constructed with building insulation that does not meet the flame spread index and smoke developed index requirements of the California Residential Code §R302.10 (based on ASTM E84 testing) provides an equivalent level of fire safety as an identical baseline conditioned attic assembly using California Residential Code §R302.10 compliant insulation. This standard is only applicable for conditioned attic assemblies used in one-and-two family dwellings of Type VB construction.

12-7-9.2 Testing agencies. Testing of the candidate and baseline assemblies shall be performed by a State Fire Marshal Approved Testing Laboratory that is accredited for conducting the tests described in this standard. Test results shall be documented in a test report as described in this standard.

12-7-9.3 Insulation – The insulation to be evaluated as part of the test shall be installed in the same fashion in both the baseline conditioned attic assembly and the candidate conditioned attic assembly. Insulation for both assemblies shall be of the same type (sheet, spray applied, batt), installed thickness, and comparable physical features including density, R-value and cell structure. When a candidate conditioned attic Assembly does not have a comparative building insulation that closely matches its chemical, physical, and form properties, the California Fire Marshal shall be permitted to approve an alternate building insulation for comparison.

Foam plastics in the baseline conditioned attic assembly shall have a flame spread index ≤ 75 and a smoke-developed index ≤ 450 when tested in accordance with the requirements of California Residential Code §R302.10 (based on ASTM E84 testing). Foam plastics within the candidate conditioned attic assembly shall not be required to be tested to ASTM E84.

12-7-9.4 Approval. Parties wishing to have candidate conditioned attic assemblies approved by the State Fire Marshal shall provide the complete test report, including construction diagrams, to the State Fire Marshal Building Materials Listing (BML) program for consideration. Based on the information provided, the State Fire Marshal shall approve candidate assemblies judged to provide an equivalent level of fire safety as baseline assemblies. Approved designs, with construction diagrams, shall be documented with the BML program listings.

12-7-9.5 Alternate materials and methods. The State Fire Marshal shall be permitted to authorize construction changes to candidate conditioned attic assemblies as follows:

1. The baseline assembly and candidate assembly match the Part A test assembly described below, except for small deviations in the candidate assembly that have been approved.
2. The candidate assembly is so different that a new baseline assembly is needed. The State Fire Marshal shall be permitted to evaluate candidate assemblies other than those described in this standard provided they are tested against a baseline conditioned attic assembly judged equivalent by the State Fire Marshal, which includes construction that complies with all applicable requirements in the California Residential Code.

12-7-9.6 Additional Construction Features. When a candidate conditioned attic assembly requires additional construction features, as compared to the baseline conditioned attic assembly, to comply with the tests in this standard, these shall be specifically identified as additional required construction features in the test report.

12-7-9.7 Referenced documents.

The following standards shall be used to evaluate candidate and baseline conditioned attic assemblies.

ASTM E119- Standard Test Methods for Fire Tests of Building Construction and Materials or UL 263- Fire Tests of Building Construction and Materials

ICC ES Acceptance Criteria AC12 Foam Plastic Insulation, Appendix B (June 2012).

I**CC-ES Acceptance Criteria AC377 Spray-applied Foam Plastic Insulation**, Appendix X, (November 2012).

NFPA 286- Standard Methods of Fire Tests for Evaluating Contribution of Wall and Ceiling Interior Finish to Room Fire Growth

12-7-9.8 Definitions.

1. **Conditioned Attic** - The unfinished space between the ceiling assembly and the roof assembly that is not considered to be a habitable attic as defined in the California Residential Code. It includes insulation on the underside of the roof deck to increase the energy efficiency of the dwelling.
2. **Baseline Conditioned Attic Assembly.** A basic conditioned attic assembly containing insulation that complies with the flame spread index and smoke developed index requirements of the California Residential Code §R302.10 (based on ASTM E84 testing).
3. **Candidate Conditioned Attic Assembly.** A conditioned attic assembly similar to the baseline conditioned attic assembly but that contains insulation that does not meet the flame spread index and smoke developed index requirements of the California Residential Code §R302.10 (based on ASTM E84 testing).
4. **Fire Resistance Rating.** A measure of the elapsed time during which a material, product, or assembly continues to exhibit fire resistance under specified exposure conditions.
5. **Fire Resistance Test.** Test assessing the ability of a material, product, or assembly to withstand fire or give protection from it for a period of time.
6. **Flashover.** The rapid transition to a state of total surface involvement in a fire of combustible materials within an enclosure.
7. **Heat Release Rate.** The thermal energy released per unit time by an item during combustion under specified conditions.
8. **Insulation Type**. For purposes of this test protocol, insulation types are spray foam, fiber batt, or polymer foam boardstock.
9. **Reaction to Fire Test.** Test assessing the response of a material, product, or assembly in contributing by its own decomposition to a fire to which it is exposed, under specified conditions.
10. **Conditioned Attic Assembly**. All components, methods, and dimensions used to construct a conditioned attic assembly. For purposes of this test the assembly includes only the roof deck and attached insulation. It does not include support trusses, ceiling joists, or insulation provided on the ceiling joists.

12-7-9.9 Part A Fire Resistance Test- Baseline Conditioned Attic Assembly.

1. **Conditioned Attic Assembly Size**. The area exposed to fire shall be not less than 180 ft^2, with neither dimension less than 12 ft. The test specimen shall not be restrained on its vertical edges.
2. **Conditioned Attic Assembly Construction**

DRAFT

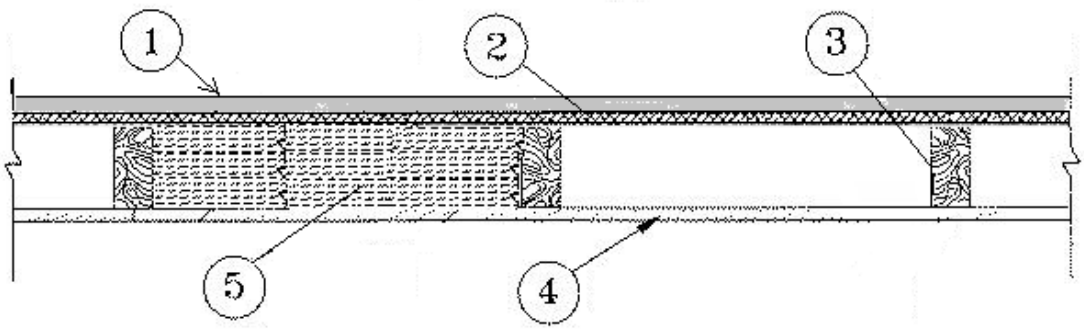

1) **Shingles and Underlayment** - A UL Class A Roofing System (TGFU) consisting of asphalt glass mat shingles and underlayment, installed in accordance with the product listing and the manufacturer's installation instructions.
2) **Sheathing** – Nominal 15/32 in. thick wood structural panels, min. grade "C-D" or "Sheathing", secured to trusses with No. 6d ringed shank nails spaced 12 in. OC along each truss.
3) **Trusses** – Nominal 2 by 4 in. lumber spaced 24 in. OC. Nominal 2 by 4 in. lumber attached at each end of the truss assembly with two 3-1/2 in. 16D galvanized steel nails per truss. Mid-span blocking provided by nominal 2 by 4 in. lumber secured between wood trusses at the middle of the span, with four "toe nailed" 3-1/2 in. 16D galvanized steel nails.
4) **Ignition barrier** – 3/8 in. thick, 4 by 8 ft. gypsum board installed with long dimension perpendicular to trusses and secured with 1-1/4 in. long, 5d cement coated nails spaced 8 in. OC along the trusses.
5) **Insulation** – Insulation to be evaluated as part of the test, installed in the same fashion for both base line conditioned attic assembly and the candidate conditioned attic assembly. Insulation for both assemblies shall be of the same type (board stock or spray applied), installed thickness, and comparable chemical and physical features including density, R-value and cell structure. Installed to fill the voids between the wood trusses in accordance with the manufacturer's instructions. Installed in the maximum thickness anticipated for approval.

3. **Load-Bearing**- Conditioned attic assembly to be tested with an applied load of 60 lbs./ft^2

12-7-9.10 PART A. Fire Resistance Test.

12-7-9.10.1 Required Test Method. ASTM E119 *Tests of Bearing Walls and Partitions* or UL 263 shall be utilized to compare the baseline conditioned attic assembly to the candidate conditioned attic assembly. The

DRAFT

assemblies shall be tested in the horizontal orientation in the floor furnace, even if they are typically installed in a sloped orientation.

1. The test shall be run until load failure, passage of flame failure and heat transmission failure, as shown below. (ASTM E119 Section 8.2.4).
2. The fire resistance test shall be continued as long as the test specimen sustains the applied load without passage of flame or gases hot enough to ignite cotton waste.
3. Time to load failure shall be the time at which the test specimen ceases to sustain the applied load (ASTM E119, section 8.2.4.1)
4. Time to passage of flame failure shall be the time at which either flame or hot gases appear on the unexposed side and are hot enough to ignite cotton waste.
5. Time to heat transmission failure shall be the time at which heat transmission through the roof deck during the test raises the temperature on the unexposed wall surface more than 250°F (139°C) above its initial temperature (ASTM E119, section 8.2.4.3).
6. The Hose Stream Test shall not be required. (ASTM E119 § Section 7.6)

12-7-9.10.2 Part A Test Report. The test report shall include the following:

1. Test Assemblies.
   b. A complete description of both the baseline conditioned attic assembly, and the candidate conditioned attic assembly, including construction diagrams.
   c. ASTM E84 test results for the insulation used in the baseline conditioned attic assembly and, if tested, the candidate conditioned attic assembly.
   d. Description of the thickness and physical characteristics of the insulation used in the baseline conditioned attic assembly and the candidate conditioned attic assembly as required by Section 12-7-9.3.
   e. Description of any additional construction features provided on the candidate assembly as compared to the baseline assembly.
2. Test Results.
   a. Test results shall include all information required by ASTM E119 or UL 263, and include the time to failure for the passage of flame criterion, the time to failure for the heat transmission criterion (ASTM E119 Section 8.2.4.3), and the time to failure for the load criterion (ASTM E119 Section 8.2.4.1).

12-7-9.10.3 Conditions of Acceptance. The candidate conditioned attic assembly shall meet and/or exceed the performance of the baseline conditioned attic assembly in regards in regards to the time to failure in the

passage of flame performance, the heat transfer performance and the load performance (ASTM E119 Section 8.2.4).

12-7-9.11 PART B. Room Corner Test.

12-7-9.11.1 Required Test Method. The ICC ES AC12 or AC377 test shall be utilized to compare the baseline conditioned attic assembly to the candidate conditioned attic assembly, as modified below.

1. Test shall be run for 5 minutes at 40 kW, and for an extended period at 160 kW, see Item 2.
2. The test shall be run until flashover occurs.
3. A standard NFPA 286 room shall be used, based on the assembly used in Part A Fire Resistance Test. Three (3) walls and one (1) ceiling shall be lined with the material to be tested.

12-7-9.11.2 Part B Test Report. The test report shall include the following:

1. Test Assemblies.
   a. A complete description of both the baseline conditioned attic assembly, and the candidate conditioned attic assembly, including construction diagrams.
   b. ASTM E84 test results for the insulation used in the baseline conditioned attic assembly and the candidate conditioned attic assembly.
   c. Description of the thickness and physical characteristics of the insulation used in the baseline conditioned attic assembly and the candidate conditioned attic assembly as required by Section 12-7-9.3.
   d. Description of any additional construction features provided on the candidate assembly as compared to the baseline assembly.
2. Test Results.
   a. Time to flashover as defined in NFPA 286 (and report the criteria used to determine flashover),
   b. Time to a heat release rate exceeding 800 kW,
   c. Time at which the heat flux to the floor exceeds 20 kW/m^2,
   d. Time at which the average upper layer temperature exceeds 600ºC,
   e. Time to a total smoke released exceeding 1,000 m^2,
   f. Time at which flames exit the doorway, and
   g. Visual observations concerning the involvement of the foam plastic insulation during the test.

12-7-9.11.3 Conditions of Acceptance. The candidate conditioned attic assembly shall meet and/or exceed the performance of the baseline conditioned attic assembly in regards to the following criteria:

1. Time to flashover, as defined in NFPA 286.
2. Time to a heat release rate exceeding 800 kW.
3. Time for the heat flux to the floor to exceed 20 kW/m^2.
4. Time for the average upper layer temperature to exceed 600ºC.
5. Time to a total smoke release exceeding 1,000 m^2.
6. Time for flames to exit the doorway.

DRAFT

Appendix H- Under Slab/Subgrade Foam

Proposed language was submitted based on the California Building Code as follows (revised code text is underlined):

§2603.3 Surface-burning characteristics. Unless otherwise indicated in this section, foam plastic insulation and foam plastic cores of manufactured assemblies shall have a flame spread index of not more than 75 and a smoke-developed index of not more than 450 where tested in the maximum thickness intended for use in accordance with ASTM E 84 or UL 723. Loose fill-type foam plastic insulation shall be tested as board stock for the flame spread and smoke-developed indexes.

Exceptions:

1. Smoke-developed index for interior trim as provided for in Section 2604.2.
2. In cold storage buildings, ice plants, food plants, food processing rooms and similar areas, foam plastic insulation where tested in a thickness of 4 inches (102 mm) shall be permitted in a thickness up to 10 inches (254 mm) where the building is equipped throughout with an automatic fire sprinkler system in accordance with Section 903.3.1.1. The approved automatic sprinkler system shall be provided in both the room and that part of the building in which the room is located.
3. Foam plastic insulation that is a part of a Class A, B or C roof-covering assembly provided the assembly with the foam plastic insulation satisfactorily passes FM 4450 or UL 1256. The smoke-developed index shall not be limited for roof applications.
4. Foam plastic insulation greater than 4 inches (102 mm) in thickness shall have a maximum flame spread index of 75 and a smoke-developed index of 450 where tested at a minimum thickness of 4 inches (102 mm), provided the end use is approved in accordance with Section 2603.10 using the thickness and density intended for use.
5. Flame spread and smoke-developed indexes for foam plastic interior signs in covered and open mall buildings provided the signs comply with Section 402.6.4
6. <u>Flame spread index and smoke-developed index shall not be required for sub-grade foam plastic insulation located in any of the following conditions:</u>
    1. <u>Exterior insulation that extends a maximum of 12” above grade and is separated from the interior by a minimum 4-inch thickness of masonry or concrete. Insulation located less than 6 inches below finish grade shall be covered with an exterior</u>

DRAFT

material that protects against ignition: 1/2-inch-thick cement board or other non combustible materials installed in such a manner that the foam plastic insulation is not exposed.

2. Insulation located between a concrete stem wall and a concrete slab, each of minimum 4-inch thickness. The insulation edge shall separated from the interior by a 15 - minute thermal barrier, ½" thickness mortar, ½" thickness concrete, or nominal 2" wood.
3. Insulation located a minimum of 6 inches below finish grade.
4. Insulation protected from exposure by a minimum 4-inch thickness of concrete or masonry.

Unrestricted insulation shall be separated from combustible concealed spaces by fireblocking materials as listed in 718.2.1.

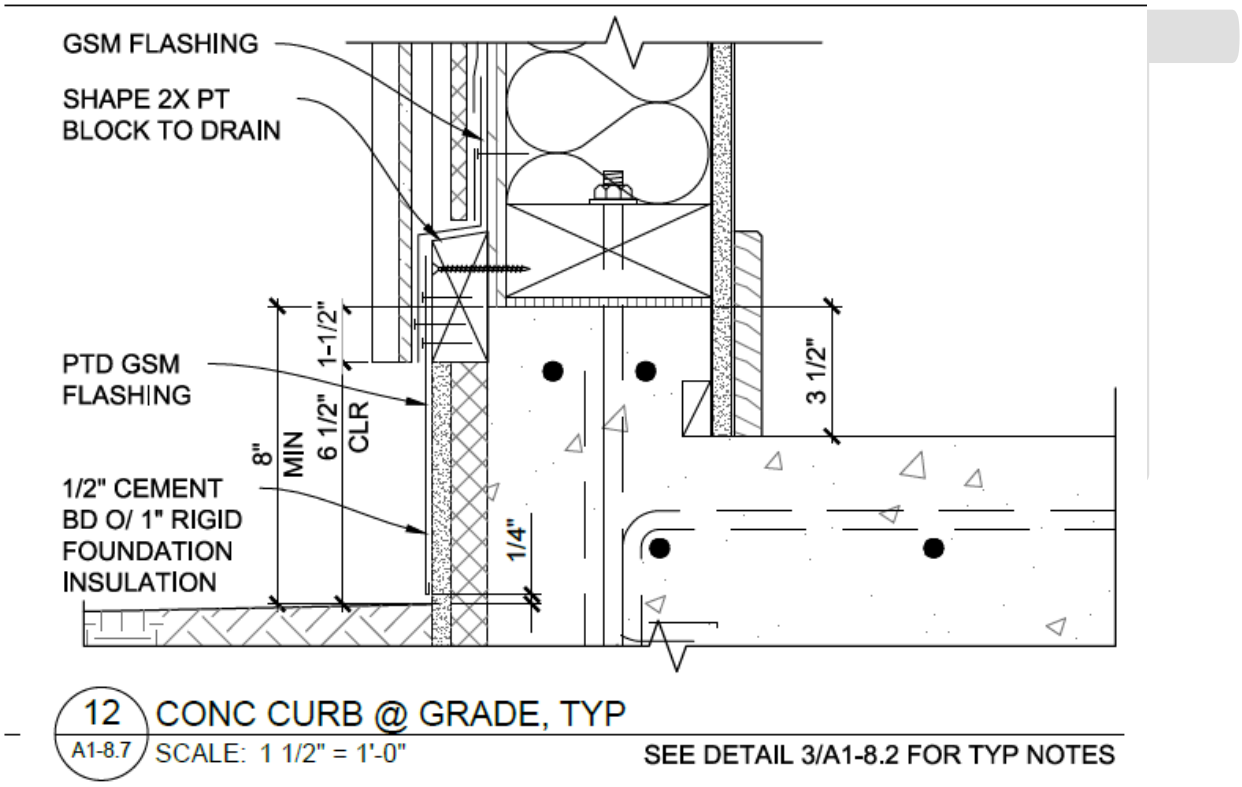

Schematic Section Detail for proposed CBC 2603.3 Exception 6.1

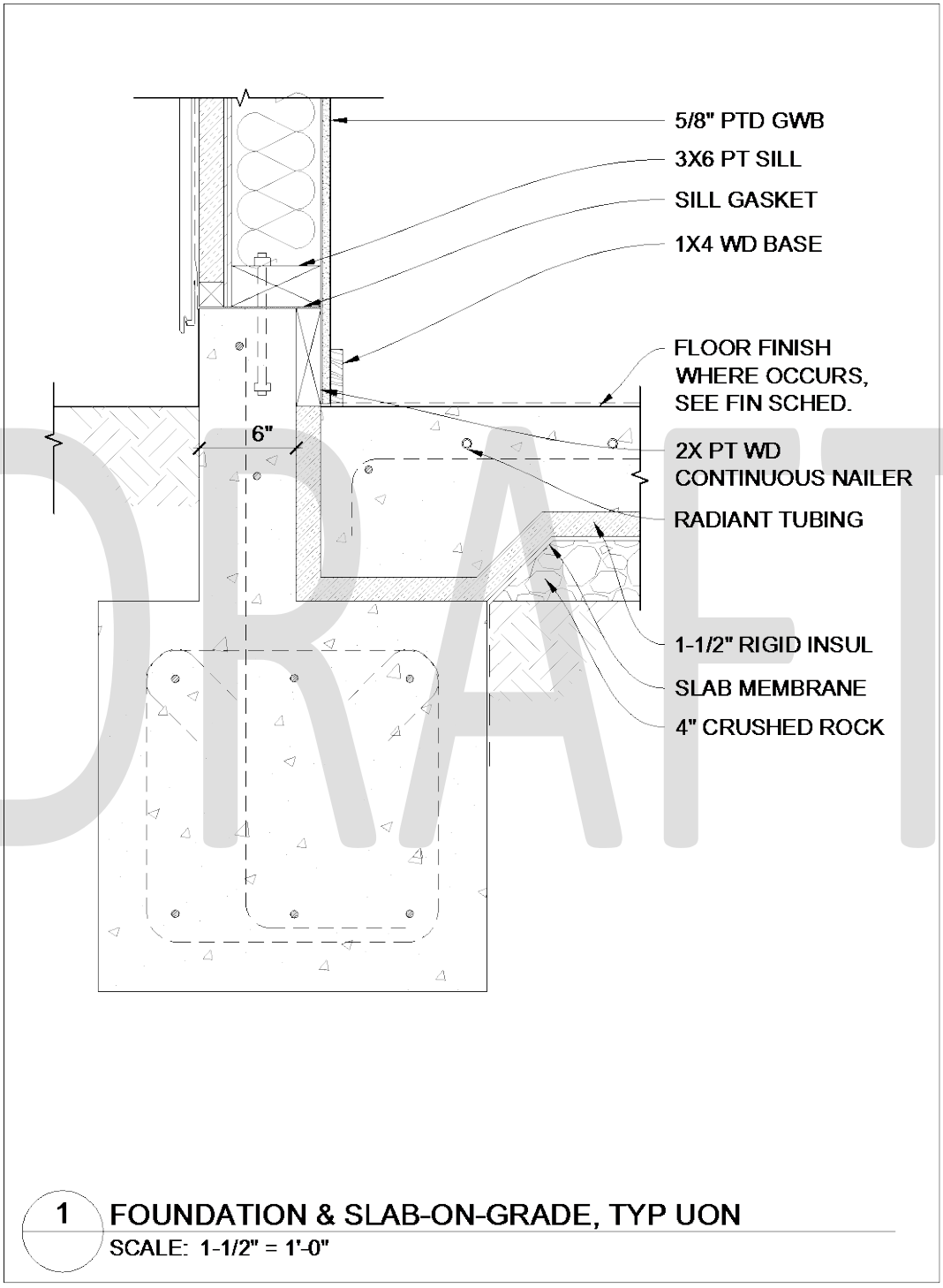

Schematic Section Detail for proposed CBC 2603.3 Exception 6.2

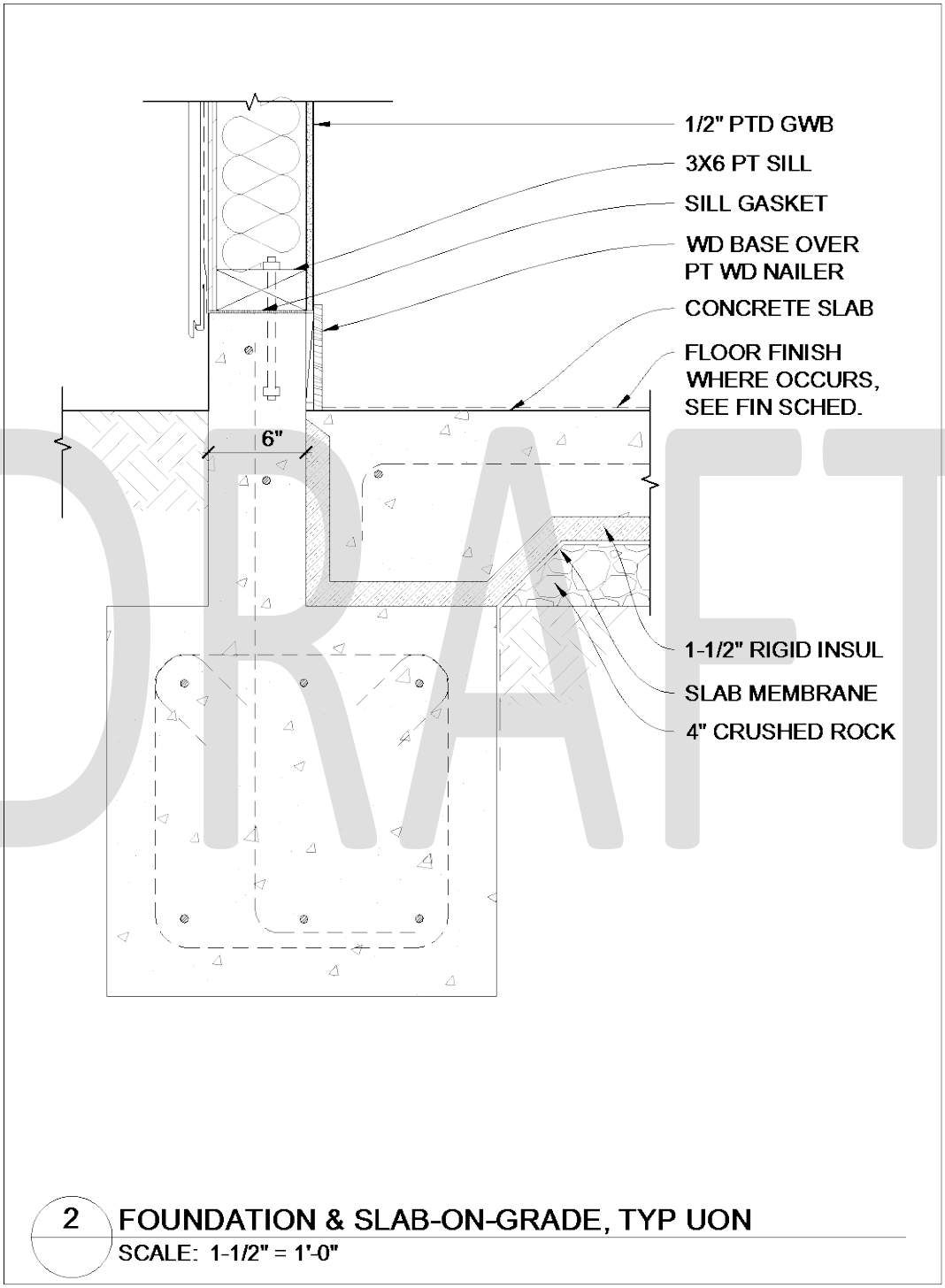

Schematic Section Detail for proposed CBC 2603.3 Exception 6.2

Appendix I- Reference Publications

The documents that the Working Group considered during their work are linked from the OSFM website at:
http://osfm.fire.ca.gov/codedevelopment/wgfsbim.php.

ASTM (2012) Standard Test Method for Surface Burning Characteristics of Building Materials (ASTM E84 – 12a), ASTM International, West Conshohocken, PA.

Babrauskas, V., Lucas, D., Eisenberg, D., Singla, V., Dedeo, M., & Blum, A. (December 01, 2012). Flame retardants in building insulation: A case for re-evaluating building codes. *Building Research and Information, 40,* 6, 738-755.

Babrauskas, V., National Institute of Standards and Technology (U.S.), & B.F. Goodrich Company. (1991). *The Role of bench-scale test data in assessing real-scale fire toxicity*. Gaithersburg, MD: U.S. Dept. of Commerce, National Institute of Standards and Technology.

Bates, M. N. (May 01, 2007). Registry-based case–control study of cancer in California firefighters. *American Journal of Industrial Medicine, 50,* 5, 339-344.

Blomqvist, P. et al. (2011) Compilation of International Building Regulations (Fire) Relevant for EPS/XPS: SP Technical Note 2010:10, Revised 2011-11-30, SP Technical Institute, Borås, Sweden.

Castino, T.G. et al. (1975) Flammability Studies of Cellular Plastics and Other Building Materials Used for Interior Finishes. Subject No. 723, Underwriters Laboratories, Northbrook, IL.

Choi, K.K. and Taylor, W. (1984) Combustibility of insulation in cavity walls. Journal of Fire Sciences, 2(3): 179-88.

Crump, D. et al. (2012) Effects of tris(1,3-dichloro-2-propyl) phosphate on cytotoxicity and mRNA expression in primary cultures of avian hepatocytes and neuronal cells. Toxicological Sciences, 126(1): 140-148.

COWI (2011). Alternatives to the use of flame retarded EPS in buildings. *Climate and Pollution Agency*.

Daniels, R. D., Kubale, T. L., Yiin, J. H., Dahm, M. M., Hales, T. R., Baris, D., Zahm, S. H., ... Pinkerton, L. E. (2013). *Mortality and cancer incidence in a pooled cohort of US firefighters from San Francisco, Chicago and Philadelphia (1950-2009)*. Emmitsburg, MD: National Emergency Training Center.

Desmet, K., Schelfaut, M., & Sandra, P. (January 01, 2005). Determination of bromophenols as dioxin precursors in combustion gases of fire retarded extruded polystyrene by sorptive sampling-capillary gas chromatography-mass spectrometry. *Journal of Chromatography. A, 1071,* 1-2.

DRAFT

Dishaw, L.V. et al. (2011) Is the pentaBDE replacement, tris(1,3-dichloro-2-propyl) phosphate (TDCPP), a developmental neurotoxicant? Studies in PC12 cells. Toxicology and Applied Pharmacology, 256(3): 281-9.

Dulmage, G. Rae (27 Jan. 2014). *ULC Standards Bulletin Reaffirmation of Can/Ulc-S774-09 Standard Laboratory Guide for the Determination of Volatile Organic Compound Emissions from Polyurethane Foam*. ULC Standards.

Ebert, J. (September 01, 2003). Formation of PBDD/F from flame-retarded plastic materials under thermal stress. *Environment International, 29,* 6, 711-716.

Eriksson, P. et al. (2006) Impaired behavior, learning and memory in adult mice neonatally exposed to hexabromocyclododecane (HBCDD). Environmental Toxicology and Pharmacology, 21(3): 317-22.

European Manufacturers of EPS (2002). *Behaviour of EPS in Case of Fire*. Brussels. European Manufacturers of EPS.

Factory Mutual (1974) Foamed Polystyrene for Construction (Data Sheet 1-58), Factory Mutual, Norwood, MA.

Factory Mutual (1978) Foamed Polystyrene for Construction (Data Sheet 1-58), Revision, Factory Mutual, Norwood, MA.

Hirschler, M. (January 01, 2006). Fire safety, smoke toxicity and acidity. *Flame Retardants, 12,* 47-58.

Hirschler, M. M. (1992). Heat release from plastic materials. *Heat Release in Fires*, 375-422.

Hirschler, M. M. (2013). Safety, Health and Environmental Aspects of Flame Retardants. In Fatma Selcen Kilinc-Balci (Ed.), *Handbook of flame retardant textiles* (pp. 108-173). Sawston, UK: Woodhead Publishing.

Hirschler, M. M. (March 11, 2014). Flame retardants and heat release: review of data on individual polymers. *Fire and Materials,* 5.)

Hirschler, M. M. (March 11, 2014). Flame retardants and heat release: review of traditional studies on products and on groups of polymers. *Fire and Materials,* 5.)

Hirschler, M. M., & Galloway, F. M. Transport and Decay of Combustion Products in Fires.

International Agency for Research on Cancer, World Health Organization, & Meeting. IARC Working Group on the Evaluation of Carcinogenic Risks to Humans. (2010). *IARC monographs on the evaluation of carcinogenic risks to humans, volume 96, alcohol consumption and ethyl carbamate: This publication represents the views and expert opinions of an IARC Working Group on the Evaluation of Carcinogenic Risks to Humans, which met in Lyon, 6 - 13 February 2007*. Lyon: IARC.

Lassen, C. et al. (2011) Alternatives to the Use of Flame Retarded EPS in Buildings, Norwegian Climate and Pollution Agency (KLIF) and COWI A/S, Oslo, Norway.

DRAFT

Lee, B.T. (1985) Standard room fire test development at the National Bureau of Standards, in Fire Safety: Science and Engineering (ASTM STP 882), ASTM, Philadelphia, PA, pp. 29-44.

LeMasters, G. K., Genaidy, A. M., Succop, P., Deddens, J., Sobeih, T., Barriera-Viruet, H., Dunning, K., ... Lockey, J. (January 01, 2006). Cancer risk among firefighters: a review and meta-analysis of 32 studies. *Journal of Occupational and Environmental Medicine / American College of Occupational and Environmental Medicine, 48,* 11, 1189-202.

Marvin, C.H. et al. (2011) Hexabromocyclododecane: current understanding of chemistry, environmental fate and toxicology and implications for global management. Environmental Science and Technology, 45(20): 8613-23.

NBS (1980) Fire Research on Cellular Plastics: The Final Report of the Products Research Committee, National Bureau of Standards, Washington, DC.

Persistent Organic Pollutants Review Committee (POPRC) (2011) UNEP/POPS/POPRC.7/19/Add.1 Addendum: Risk Management Evaluation on Hexabromocyclododecane, POPRC, Geneva.

Posner, S. et al. (2010) Exploration of Management Options for HBCD, Swerea IVF, Molndal.

Rose, A. (1975) Fire Testing of Rigid Cellular Plastics (IR-422), National Research Council of Canada, Ottawa, ON.

Shaw, S. D., Berger, M. L., Harris, J. H., Yun, S. H., Wu, Q., Liao, C., Blum, A., ... Kurunthachalam, K. (2013). *Persistent organic pollutants including polychlorinated and polybrominated dibenzo-p-dioxins and dibenzofurans in firefighters from Northern California*. Emmitsburg, MD: National Emergency Training Center.

Trevino, Javier O., and Deg Priest (16 Jan. 2013). Safer Insulation Solution Code Change Resolution Rebuttal. Letter to Betsy Steiner. Priest & Associates Consulting.

Troitzsch, J. (January 01, 2000). Fire gas toxicity and pollutants in fires - The role of flame retardants. Flame Retardants, 9, 177-184.

US Environmental Protection Agency (USEPA) (2008) Initial Risk-Based Prioritization of High Production Volume Chemicals, USEPA, Washington, DC.

Van der Veen, I. and de Boer, J. (2012) Phosphorus flame retardants: properties, production, environmental occurrence, toxicity and analysis. Chemosphere, 88(10): 1119-53.

Weber, R. (September 01, 2003). Relevance of BFRs and thermal conditions on the formation pathways of brominated and brominated–chlorinated dibenzodioxins and dibenzofurans. *Environment International, 29,* 6, 699-710.

DRAFT

Wichman, I. S. (2003). Material flammability, combustion, toxicity and fire hazard in transportation. Progress in Energy and Combustion Science, 29(3), 247-299.

Williamson, R.B. and Baron, F.M. (1973) A corner fire test to simulate residential fires. Journal of Fire and Flammability, 4: 99-105.

DRAFT